OWNER/OPERATOR'S MANUAL & PARTS LIST

VENTRAC

VR300

Venture Products Inc. Orrville, OH

REVISED 11-30-07
09.10040

VENTRAC
VENTURE PRODUCTS INC

Orrville, OH

www.ventrac.com

TO THE OWNER

Product Identification

If you need to contact an Authorized Ventrac Dealer for information on servicing your product, always provide the Product Model and Serial numbers.

Please fill in the following information for future reference. See picture below to find the location of the identification number. Record them in the spaces provided below.

Date of Purchase: Month _____ Day _____ Year _____

Dealer: _____

Dealer Address: _____

_____

Dealer Phone Number: _____

Dealer FAX Number: _____

Model # (A): _____

Serial # (B): _____

Affix Part/Serial Number label here

Venture Products Inc. reserves the right to make changes in design or specifications without obligation to make like changes on previously manufactured products.

TABLE OF CONTENTS

INTRODUCTION — SECTION A

Description & Specifications A-1

SAFETY — SECTION B

Safety Symbols B-1
Decals B-2
Decal Locations B-3
General Safety Procedures B-4
Safety Operation & Techniques B-5

OPERATION — SECTION C

Controls . . . . . C-1 & 2
Pre-start Checklist C-3
Operator Compartment Entry C-3
Starting the Engine / Safety Tips / Operating Instructions C-4

MAINTENANCE/ADJUSTMENTS — SECTION D

Precautions / General Maintenance D-1
Maintenance Schedule D-2
Oils / Fuel Tank D-3
Tires / Parking Brake / Drive Belt Adjustments D-4
Drive Chain / Neutral Safety Switch / Ground Clearance Adjustments D-5
Electrical Schematic D-6

PARTS & ILLUSTRATED DRAWINGS — SECTION E

Chair Compartment . . . . . E-1 & 2
Tailgate Mechanism . . . . . E-3 & 4
Brake Mechanism . . . . . E-5 & 6
Pump Controls . . . . . E-7 & 8
Drive Wheel . . . . . E-9 & 10
Engine . . . . . E-11 & 12
Handle Bar & Controls . . . . . E-13 & 14
Coast Lever & Electrical Parts . . . . . E-15 & 16
Shields & Battery . . . . . E-17 & 18

OPTIONS

Gun Rack . . . . . F-1 & 2
Brake Lever Extension . . . . . F-3 & 4
Ramp / Tailgate Lever Extension . . . . . F-5 & 6
Tachometer / Hour Meter . . . . . F-7 & 8

WARRANTY

INTRODUCTION

Ventrac 300 Specifications

Engine	6.5 HP Tecumseh
Fuel Capacity	3 qts.
Speed	0 - 15 MPH
Height	43.5 inches
Overall Width	42.5 inches
Overall Length	75 inches
Chair Compartment Length	50 inches
Chair Compartment Width	32 inches
Ground Clearance	1 - 4 inches
Weight	320 lbs.
Weight Capacity	400 lbs.
Tires	(Front) 16 x 7.5 x 8
	(Back) 15 x 4.0 x 8

Venture Products, Inc. reserves the right to change these specifications without notice.

ATTENTION:

This symbol identifies potential health and safety hazards. It marks safety precautions. Your safety and the safety of others is involved.

SIGNAL WORD DEFINITIONS

⚠ DANGER

Indicates an imminently hazardous situation which, if not avoided, will result in death or serious injury. This signal word is limited to the most extreme cases.

⚠ WARNING

Indicates a potentially hazardous situation which, if not avoided, could result in death or serious injury.

⚠ CAUTION

Indicates a potentially hazardous situation which, if not avoided, may result in minor or moderate injury and/or property damage. It may also be used to alert against unsafe practices.

⚠ WARNING

The engine exhaust from this product contains chemicals known to the State of California to cause cancer, birth defects or other reproductive harm.

CALIFORNIA
Proposition 65 Warning

Diesel engine exhaust and some of it's constituents are known to the State of California to cause cancer, birth defects or other reproductive harm.

CALIFORNIA PROPOSITION 65
Battery Warning

Battery posts, terminals, and related accessories contain lead and lead compounds, chemicals known to the State of California to cause cancer and reproductive harm.

WASH HANDS AFTER HANDLING!

The following decals must be maintained on your Ventrac VR300. If any decals are faded or missing, contact your dealer promptly for replacements.

A

B

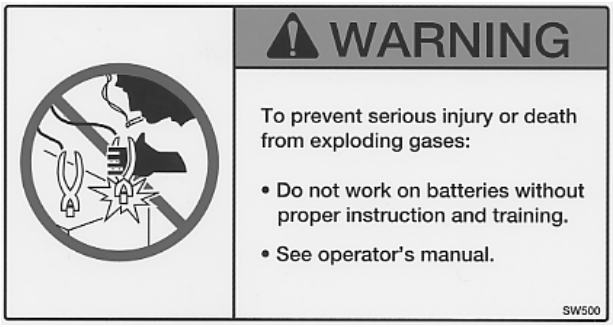

C

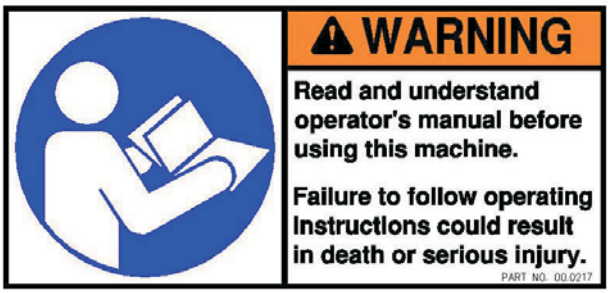

D

E

Decal	Page & Location	Description	Part Number
A	B-3	Caution - Read Owner’s Manual	00.0135
B	B-3	Danger - Pinching Hazard	00.0102
C	B-3	Warning - Battery Decal	00.0124
D	B-3	Read Owner's Manual	00.0217
E	B-3	Parking Brake Decal	00.0129

Safety Decal Locations

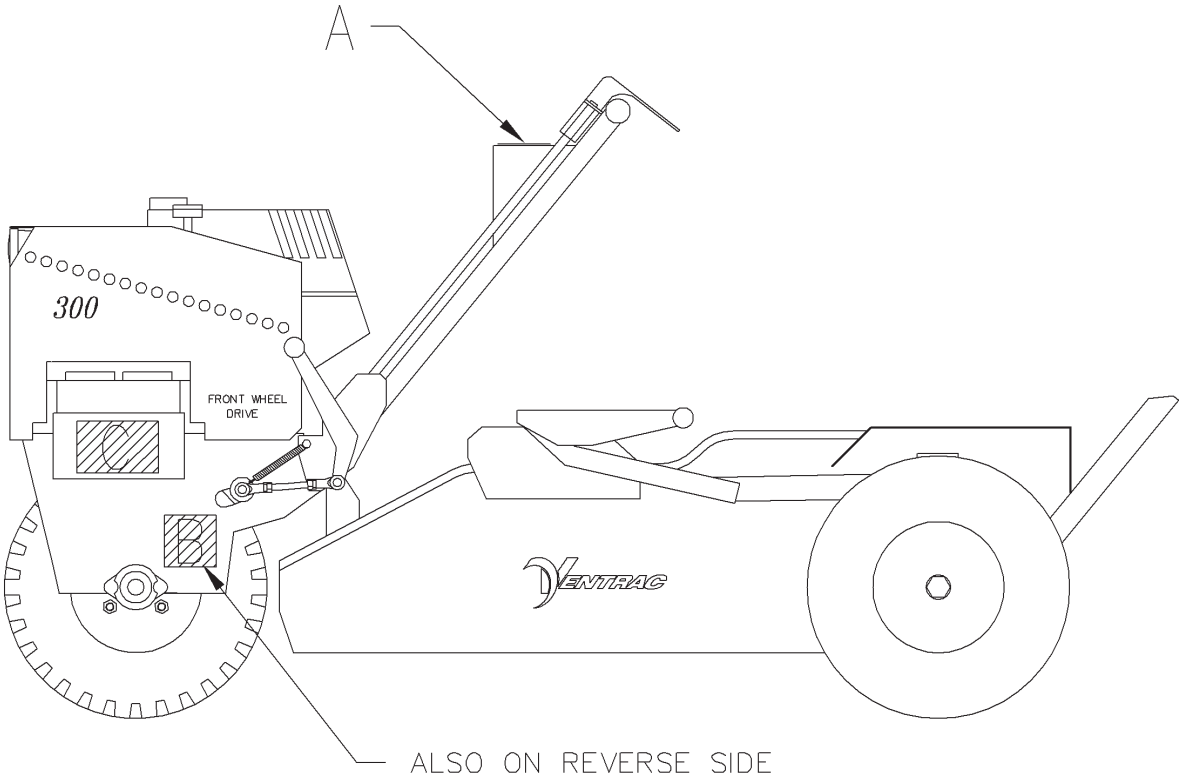

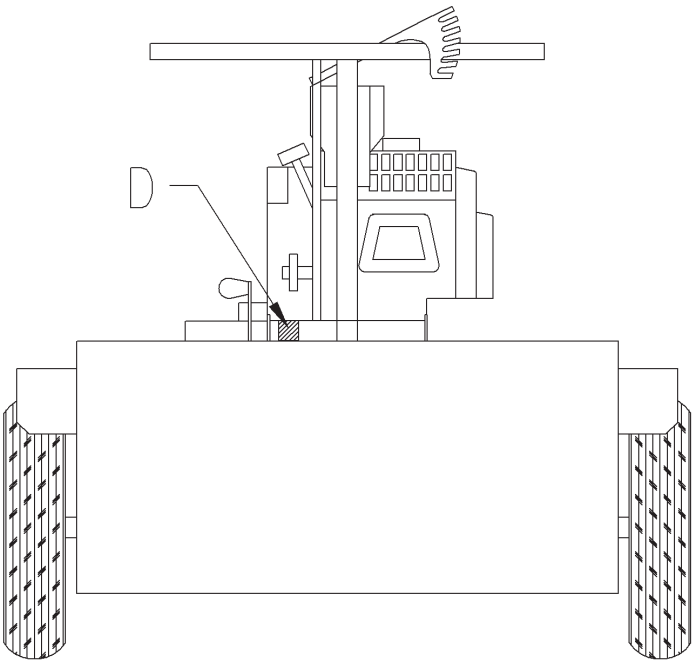

General Safety Procedures for Ventrac Tractors, Attachments, & Accessories

Read and understand the operator's manual before operating this equipment.

Observe and follow all safety decals.

DO NOT let children or any untrained person operate the tractor or attachment. Make sure that all operators of this equipment are thoroughly trained in using it safely.

Never allow additional riders on the tractor or attachments.

DO NOT operate tractor or attachments if you are under the influence of alcohol, drugs, or medication that may impair judgment or cause drowsiness, or if you are not feeling well.

Operate all controls from the operators seat only.

Before operating equipment, make sure all shields are in place and fastened.

Ensure the attachment or accessory is locked or fastened securely to the tractor (power unit) before
operating. See tractor manual for locking procedure.

Ensure that all bystanders are clear of the tractor and attachment before operating. Be especially careful and observant if other people are present. Never assume that bystanders will remain where you last saw them.

Always look in the direction the tractor is moving.

Never direct the discharge of any attachment in the direction of people, animals, buildings, vehicles, or objects of value.

Stop operation immediately at any sign of equipment failure and correct the problem before continuing to operate. An unusual noise can be a warning of equipment failure or a sign that maintenance is required.

Before adjusting, cleaning, lubricating, or changing parts on the tractor or attachment, engage the parking brake, lower the attachment to the ground, stop the engine, and remove the ignition key.

To prevent the risk of uncontrolled equipment movement on tractors equipped with 2 speed axles, always shift the transaxle range with the power unit stationary on level ground and with the parking brake engaged.

If equipment is to be left unattended, engage the parking brake, lower the attachment to the ground, stop the engine, and remove the ignition key.

VR300 Safety Procedures

⚠ WARNING

Before making any repairs or adjustments, set parking brake, shut the engine off, and remove the key.

⚠ WARNING

Read and understand the operator's manual before operating this equipment.

⚠ WARNING

The owner is responsible for proper wheelchair lockdown. It is important that the wheelchair is held securely in place at all times during operation.

Engine exhaust gases contain poisonous carbon monoxide. Carbon monoxide is odorless, colorless, and can cause death if inhaled. Avoid inhaling exhaust fumes, and never run the engine in a closed building or confined area.

Become familiar with all controls and their functions before operating the VR300.

Avoid adverse ground conditions, which can limit performance and stability of equipment, and could cause serious injury or death.

A safety switch requires the Speed Control Lever to be in the neutral position to start the engine.

Vary vehicle speed with the Speed Control Lever, not with the engine speed. Always maintain adequate engine speed during operation of the VR300.

Always check to the rear before moving the VR300 in reverse.

Never allow riders on the VR300.

Never attempt to make sharp turns at a high rate of speed.

While on a hill or slope, NEVER turn the engine off under any circumstance, without first making sure the parking brake will hold the VR300 in place. Ensure the parking brake is set before exiting the VR300.

VEHICLE CONTROLS

Ignition Switch - Turn key clockwise to start engine. (Note: Speed control lever must be in neutral with hand removed from lever.

Light Switch - For headlight.

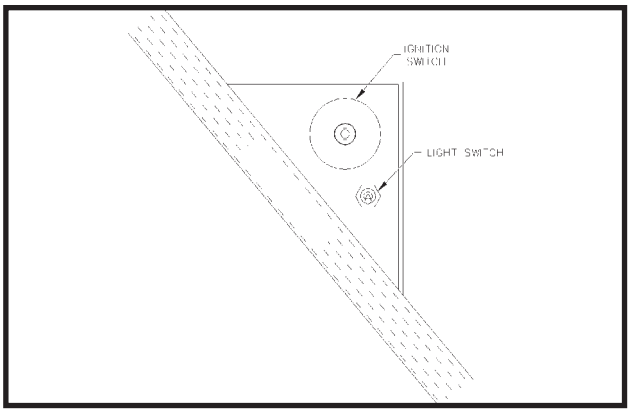

Figure 1 - Switch Panel

Throttle Lever - To increase engine speed move lever to the right. To decrease engine speed move lever to the left.

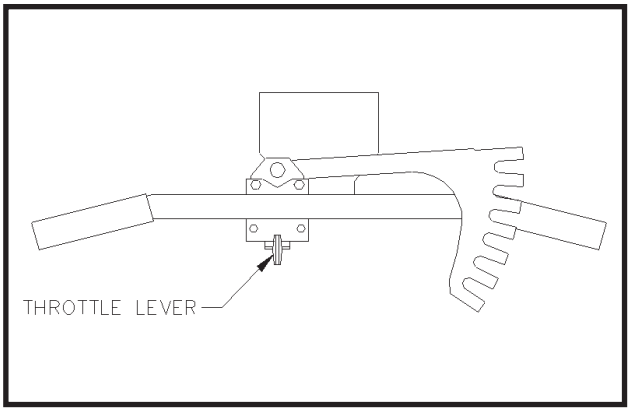

Figure 2 - Throttle Lever

Chair Compartment Lever - To raise tailgate, pull handle back. To lower tailgate, push handle forward.

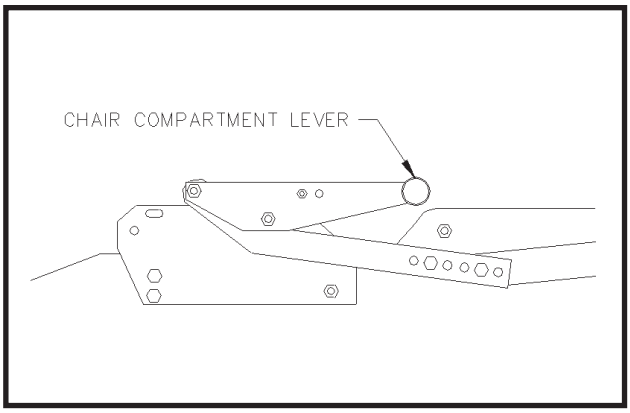

Figure 3 - Chair Compartment Lever

Speed Control / Forward/Reverse Lever
The speed control levercontrols the forward/reverse motion of the unit. Pushing forward or backward beyond the neutral position initiates movement. The further the speed control lever is pushed from neutral the faster the unit will go. Pulling the lever back to neutral decreases your speed, as well as providing a braking action.

Braking - The hydrostatic transmission provides a braking action when the speed control lever is returned to neutral.

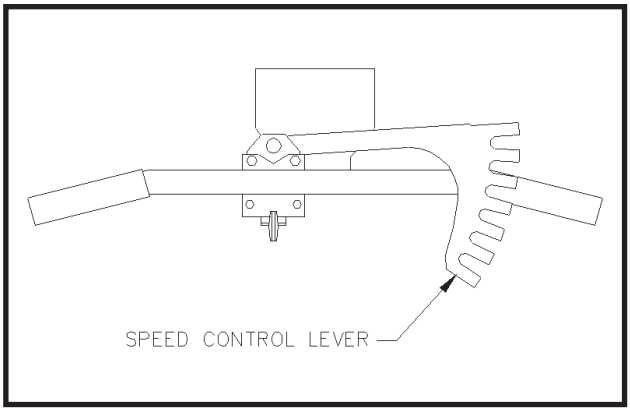

Figure 4 - Speed Control Lever

Parking Brake Lever - Pull the lever back to engage the parking brake. Push the lever forward to release the parking brake. The parking brake is located near the left rear of the engine.

To adjust the parking brake, see page D-4.

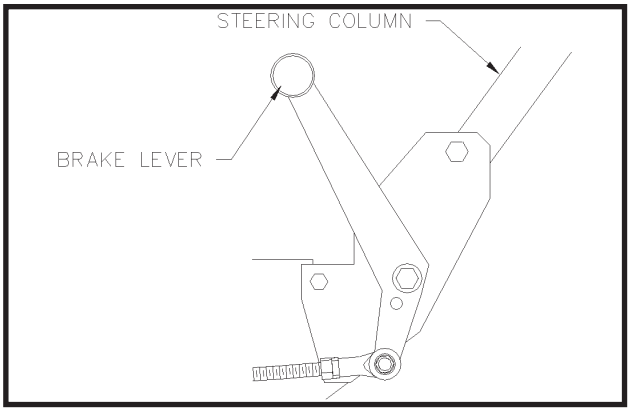

Figure 5 - Parking Brake Lever

Coast Lever - The coast lever (located near the right front of the engine) is used to disengage the hydrostatic drive, which allows the unit to freewheel. During normal operation, the lever is in the forward position, engaging the drive. If it is necessary to push or tow the unit, first pull the lever back, then down, locking it in place behind the bolt head.

CAUTION: The lever must never remain in the disengaged position, except during actual freewheeling. Never attempt to operate the unit while drive is disengaged.

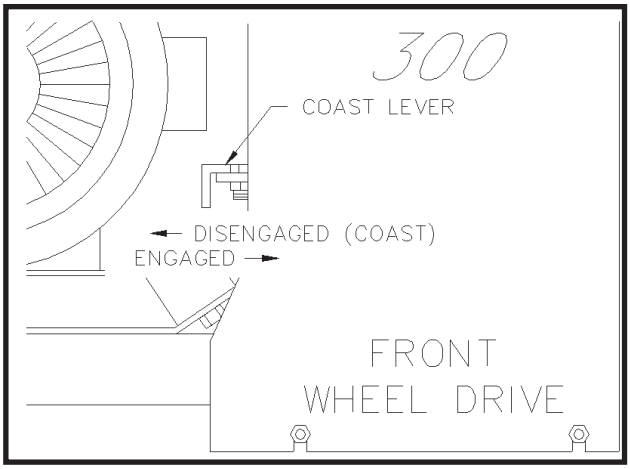

Figure 6 - Coast Lever

Pre-start Check List

1. Visually check for leaks, flat tires, loose wires, and loose hardware.
2. Assure parking brake is secure.

Engine Checks

1. Check fuel level.
2. Check air cleaner. Clean if necessary.
3. Check engine oil level. Add oil if necessay. See page D-3.
4. Check for engine oil leaks.

CAUTION: Operating the engine with a blocked grass screen, dirty or plugged cooling fins, and/or cooling shrouds removed, can cause premature engine failure due to overheating.

Hydrostatic Check

1. Check oil level. Add if necessary. See page D-3.
2. Check for hydraulic oil leaks. If a leak is discovered, repair and check oil level.

Operator Compartment Entry

1. If the tailgate is not already lowered, push forward on the chair compartment lever located on the left side of the compartment.
2. Align the wheelchair in the middle of the tailgate/ramp and slowly enter the compartment.
3. Roll chair forward until contact is made between chair and front stops.
4. Pull back on chair compartment lever to close the tailgate. This helps secure the wheelchair between the front stops and tailgate.
5. The tailgate (page E-3) and front stops (page E-1) are adjustable to accommodate most wheelchairs. If proper adjustment cannot be made in securing the wheelchair, additional stops or lockdowns of the owner's choice must be installed.

Starting the Engine

1. Read and understand the Engine Owner's Manual
2. Be certain all bystanders are clear of the VR300.
3. Move throttle lever approximately one-half of its travel range.
4. Move speed control lever to the neutral position. A safety switch prevents the engine from starting in any other position.
5. Insert key into the ignition switch. Turn clockwise until the engine starts. (Do not crank engine for more than 10 seconds at a time, and wait 60 seconds between start attempts.)
6. Before moving the VR300, allow oils to circulate and warm. Several minutes is recommended for medium or cold conditions and approximately 20 seconds for warm conditions.

Operating Instructions

1. Read and understand the Operator's Manual before operating the VR300.
2. After start-up, select desired engine speed with the throttle. Always maintain adequate RPM to keep engine from lugging or stalling during operation.
3. Release parking brake.
4. Increase or decrease the speed of the tractor by movement of the speed control lever.
5. Make allowances in speed selection for hills, slopes, and rough terrain. If the operator is uncomfortable or unsure of the unit's stability, the operator should cease operation in that condition.
6. The hydrostatic transmission provides a braking action when the speed control lever is returned to neutral.
7. After operation, set parking brake, turn off engine, and remove ignition key.

MAINTENANCE

Precautions

1. Before performing any type of service or maintenance on this machine, place the VR300 in the neutral position, set the parking brake, turn the engine off, and remove the ignition key.
2. Block tires to prevent the VR300 from moving.
3. Always use the proper tools to prevent bodily injury and damage to hardware.
4. Never attempt to tow the VR300 without disengaging the drive using the coast lever. Never attempt to operate the VR300 while the drive is disengaged.
5. Follow the recommended maintenance schedule on page D-2.

WARNING: Engine and hydraulic components can get extremely hot from operation. To prevent severe burns, do not touch these areas while the engine is running or immediately after it is turned off. Never operate the VR300 withheat shields or guards removed.

General Maintenance

1. Review Operator's Manual periodically.
2. Keep the VR300 clean.
3. Check all tires for proper inflation. See page D-4.
4. Check that the battery is securely held in place and the terminals are free of corrosion. Properly clean and lightly lubricate battery terminals with grease.
5. Check all wiring and switches. Look for loose connections and broken or frayed wires.
6. Check headlight. Adjust for best illumination.
7. Check drive belt and drive chain for frays and wear. Replace if necessary. If adjustment is needed, refer to page D-4 (belt) or D-5 (chain).
8. Test parking brake. If tractor moves freely with minimal parking brake pressure, the brake needs to be adjusted. See page D-4 for adjustment.

Maintenance Schedule

Maintenance Required

Frequency / Type	Spring Startup	B/ Starting Engine	5 Hours	50 Hours	Full Service 100 Hours	200 Hours	300 Hours	400 Hours	Full Service 500 Hours
* Review Engine Operators Manual	X	X	X	X	X	X	X	X	X
Review 300 Operators Manual	X	X	X	X	X	X	X	X	X
Check for Oil Leaks	X	X							
Check for Loose Nuts or Bolts	X	X							
Check Belt & Chain	X	X							
Check Tires	X	X							
Check All Oil Levels	X	X							
Clean Cooling Shrouds & Fins					X	X	X	X	X
Check Battery	X	X			X				X
Check Tire Pressures	X				X				X
Grease Fittings (every 50 hours)				X	X				

***Refer to engine operators manual for engine maintenance.**

Follow manufacturers recommendations for all fluid types.

All maintenance items may need to be serviced more frequently under dusty or abnormal conditions.

After 500 hours, follow routine intervals for all maintenance schedules.

Engine Oil

The importance of checking and maintaining the proper oil level in the crankcase cannot be overemphasized. See Engine Operator's Manual. Check oil BEFORE EACH USE as follows.

1. Make sure the engine is stopped, level, and cool so the oil has had time to drain into the sump.
2. Clean the area around the oil fill cap and dipstick, before removing it. This will help to keep dirt, grass clippings, etc., out of the oil.
3. Remove the dipstick and wipe the oil off. Reinsert the dipstick into the tube and press all the way down.
4. Remove the dipstick and check the oil level. The level should be in the "Operating Range" of the dipstick. If low, add oil of the proper type up to the "F" mark. (Check engine manual for recommended oils.) Reinstall dipstick. Never operate the engine with the oil level below the "L" mark, or above the "F" mark, on the dipstick.

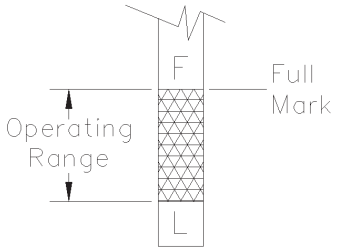

Figure 7 - Engine Oil Dipstick

5. Total capacity when drained and new filter installed is approximately 1-1/4 U.S. pints. Check dipstick during refilling.
6. Refer to the Engine Operator's Manual for more details on the engine oil level, type of oil recommended, and changing the engine oil.

Hydrostatic Oil

The importance of checking and maintaining the proper oil level in the hydrostatic drive cannot be overemphasized. Check oil as follows: (Refer to page D-2 for schedule)

1. Make sure the engine is stopped, the hydrostatic oil is cool, and the VR300 is on a level surface.
2. Locate the oil level check line on plastic oil reservoir located on top of the drive pump.
3. If necessary, add oil to the line. Use Venture Products hydrostatic oil only. (Part # 15.0032-01)
4. Always clean the area around the oil fill cap before removing the cap. This will help keep dirt, grass clippings, etc., out of the oil.

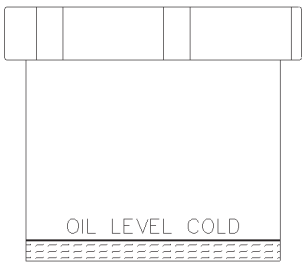

Figure 8 - Hydrostatic Oil

Fuel Tank

1. When filling the fuel tank, do not fill up to the top of the neck. Always allow room for expansion of fuel resulting from temperature changes.
2. The total capacity of the fuel tank is 3 quarts.

WARNING: Gasoline is extremely flammable, and its vapors can explode, if ignited. Do not fill the fuel tank while the engine is hot or running, since spilled fuel could ignite, if it comes in contact with hot parts or sparks. Do not start the engine near spilled fuel.

Tires

1. Always maintain the proper tire pressure to achieve optimum traction, ride, and tire life.

   Front tire: 16 x 7.5 x 8 - maximum recommended inflation is 24 PSI.

   Rear tire: 15 x 4.0 x 8 - maximum recommended inflation is 40 PSI. Minimum inflation is 20 PSI.

Grease Locations

1. Grease both rear wheels, the two drive wheel bearings, and the steering pivot. (1 pump each) Refer to page D-2. Do not over grease.

Parking Brake Adjustment

1. Block wheels so the VR300 cannot move, and release the parking brake.
2. Loosen the jam nuts on the yoke ends connecting rod.
3. Remove the lock nut that connects the lower yoke end to the brake rod.
4. Pull the lower yoke end from the brake rod. Turn the yoke end and connecting rod until the desired new length is acquired. (Note: Maintain equal length of threads into both yoke ends.)
5. Reconnect yoke to brake rod. Move brake lever to observe travel.
6. Repeat steps 3 through 5 until brake lever snaps securely over center, pushing the brake rod firmly against the front tire.
7. Check and reinstall lock nut. If lock nut can be turned without a wrench, it must be replaced.
8. Re-tighten the jam nuts on the yoke ends.

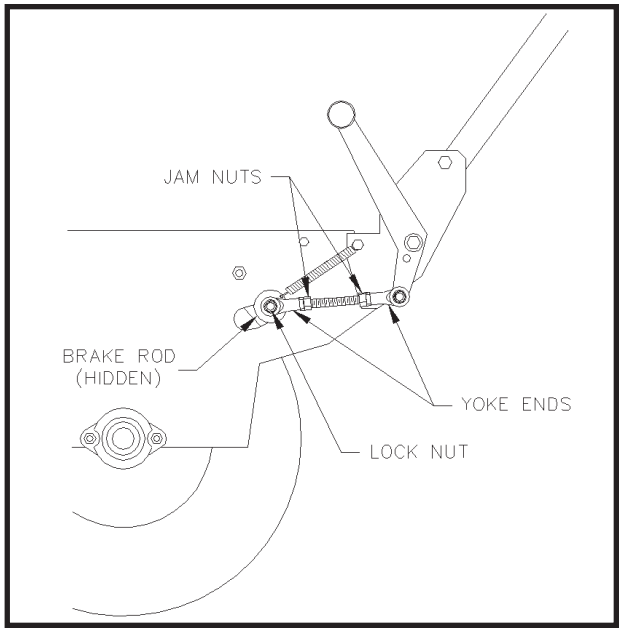

Figure 9 - Parking Brake Adjustment

Drive Belt Adjustment

1. Remove ignition key.
2. Remove drive shield.
3. Loosen the four engine bolts just enough to slide engine.
4. Move engine until the desired belt tension is achieved. (approximatelt 1/8” deflection) A pry bar can be inserted into a frame hole located at the front left of the engine base to assist in tightening the belt.
5. Use a straight edge to be certain the two pulleys are running parallel. Rotate engine slightly, if necessary, and recheck tension.
6. Replace the drive shield.

Drive Chain Adjustment

1. Remove ignition key.
2. Loosen idler sprocket bolt.
3. Slide bolt and sprocket until proper chain tension is achieved. (approximately 1/4 - 3/8” deflection)

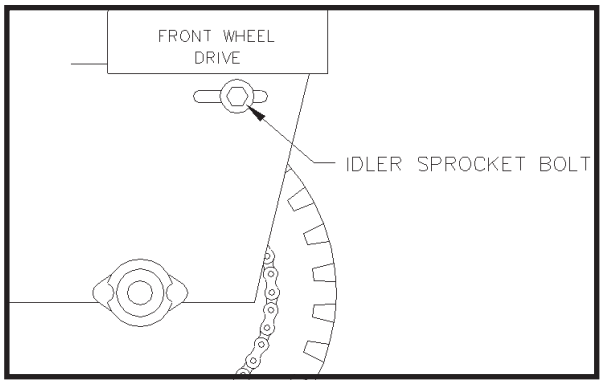

Figure 10 - Drive Chain Adjustment

Neutral Adjustment

1. Remove ignition key.
2. Loosen pivot bolt. (left rear of engine)
3. If VR300 creeps forward when idling, turn set screw counterclockwise. If VR300 creeps backward when idling, turn set screw clockwise.
4. Tighten pivot bolt and test. Readjust, if necessary, until unit remains in neutral while idling. Adjust neutral safety switch, if necessary.

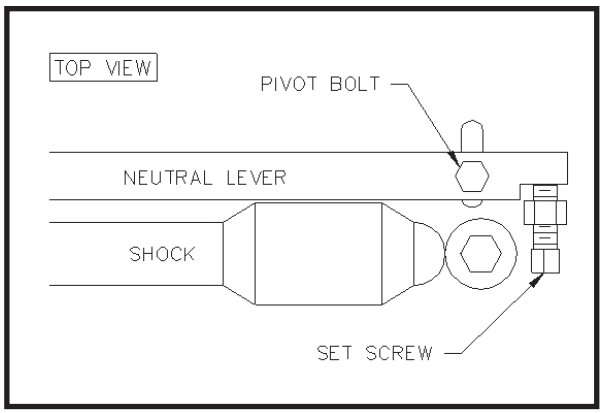

Figure 11 - Neutral Adjustment

Neutral Safety Switch Adjustment

1. Place VR300 in neutral.
2. Shut off engine and remove ignition key.
3. Remove drive shield.
4. Neutral safety switch is located at front of machine on frame above the drive tire.
5. The switch button must be fully depressed against the neutral lever (while in neutral). To adjust, loosen bolt holding safety switch bracket and slide the bracket until safety button is fully depressed against neutral lever. Tighten bolt.
6. Replace drive shield and test. Unit must start only while in neutral.

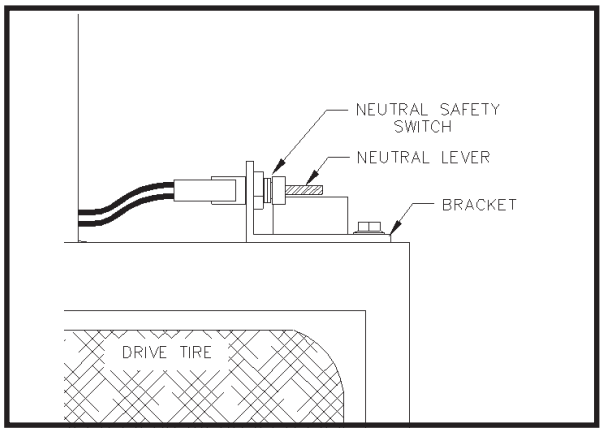

Figure 12 - Neutral Safety Switch

Ground Clearance Adjustment

1. Remove ignition key.
2. Raise back end of rear compartment, using a floor jack, and block securely too prevent compartment from dropping.
3. Remove the nut that holds the rear wheel from the inside of chair compartment.
4. Move the wheel/axle assembly to the desired height and replace the nut.
5. Tighten the two nuts against the compartment side, leaving the wheel to spin freely, but without excessive side motion.
6. Repeat steps 2-4 on opposite wheel.

Electrical Schematic

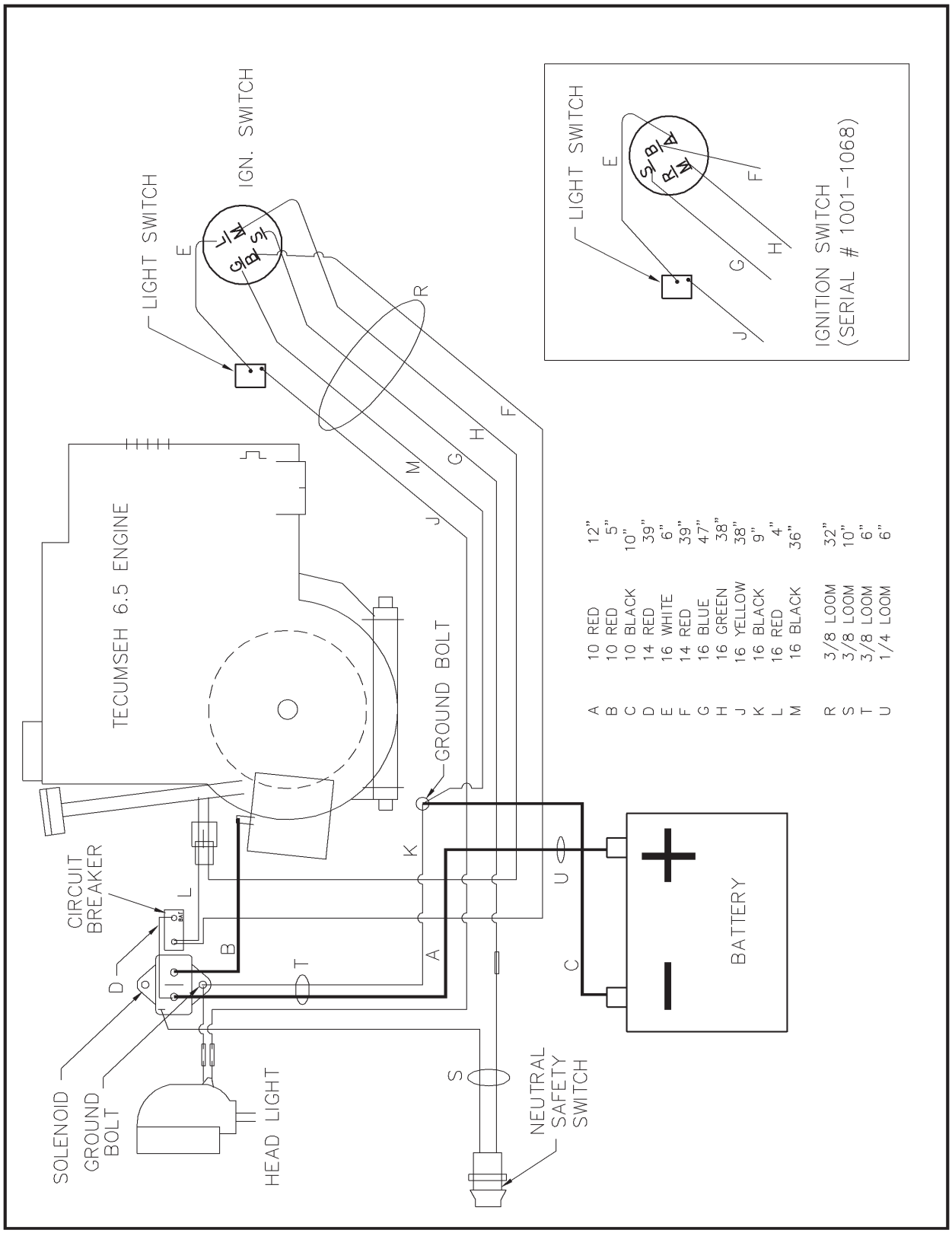

ILLUSTRATED DRAWING
CHAIR COMPARTMENT

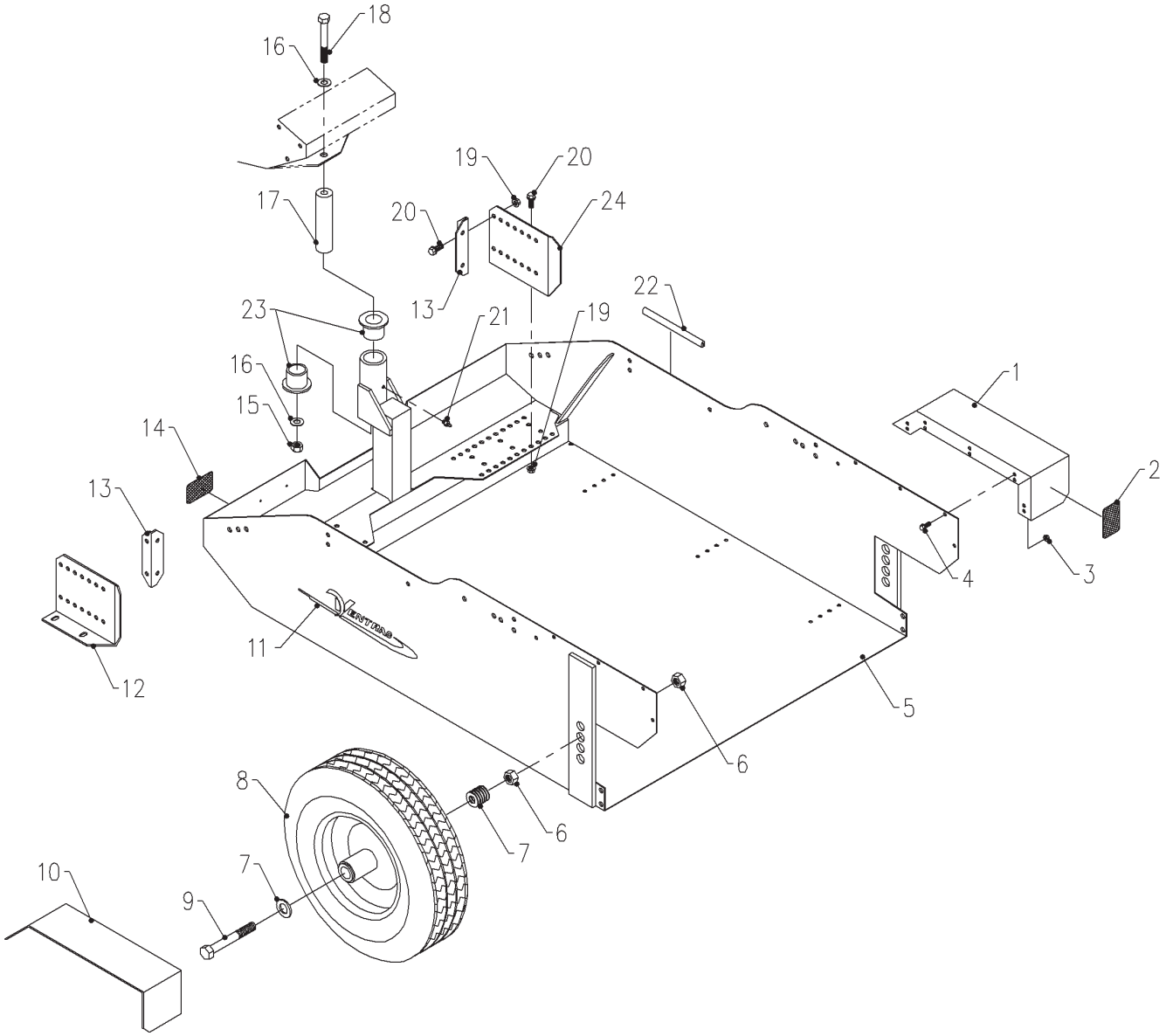

CHAIR COMPARTMENT

REF.	PART NO.	DESCRIPTION	QTY.
1	60.0639	Right Fender	1
2	47.0109	Reflector (red)	2
3	99.SF04	1/4-20 Flange Nut	10
4	99.SF0404	1/4-20 x 1/2 Flange Bolt	10
5	62.0746	Chair Compartment	1
6	92.12	3/4-10 Nut	4
7	95.12	3/4 SAE Flat Washer	14
	95.12	3/4 SAE Flat Washer (Wide Tire)	22
8	53.0081	Wheel Assembly	2
	53.0085	Wheel Assembly (Wide Tire)	2
9	90.1244	3/4-10 x 5-1/2 Bolt	2
	90.1252	3/4-10 x 6-1/2 Bolt (Wide Tire)	2
10	60.0640	Left Fender	1
11	00.0189	Decal, Ventrac	2
12	64.0632	Left Wheel Guide	1
13	64.0633	Wheel Stop	2
14	47.0110	Reflector (amber)	2
15	99.A08	1/2-13 Lock Nut	1
16	94.08	1/2 USS Flat Washer	2
17	64.0628	Pivot Spacer	1
18	90.0848	1/2-13 x 6 Bolt	1
19	99.SF05	5/16-18 Flange Nut	8
20	99.SF0504	5/16-18 x 1/2 Flange Bolt	8
21	29.GF0001	1/4-28 Grease Fitting	1
22	06.0042*	*Trim Loc x 48”	2
23	85.B0060	1-1/4 x 1-1/2 Nylon Bushing	2
24	64.0631	Right Wheel Guide	1

*06.0042 is sold by the foot. Specify length when ordering.

ILLUSTRATED DRAWING
TAILGATE MECHANISM

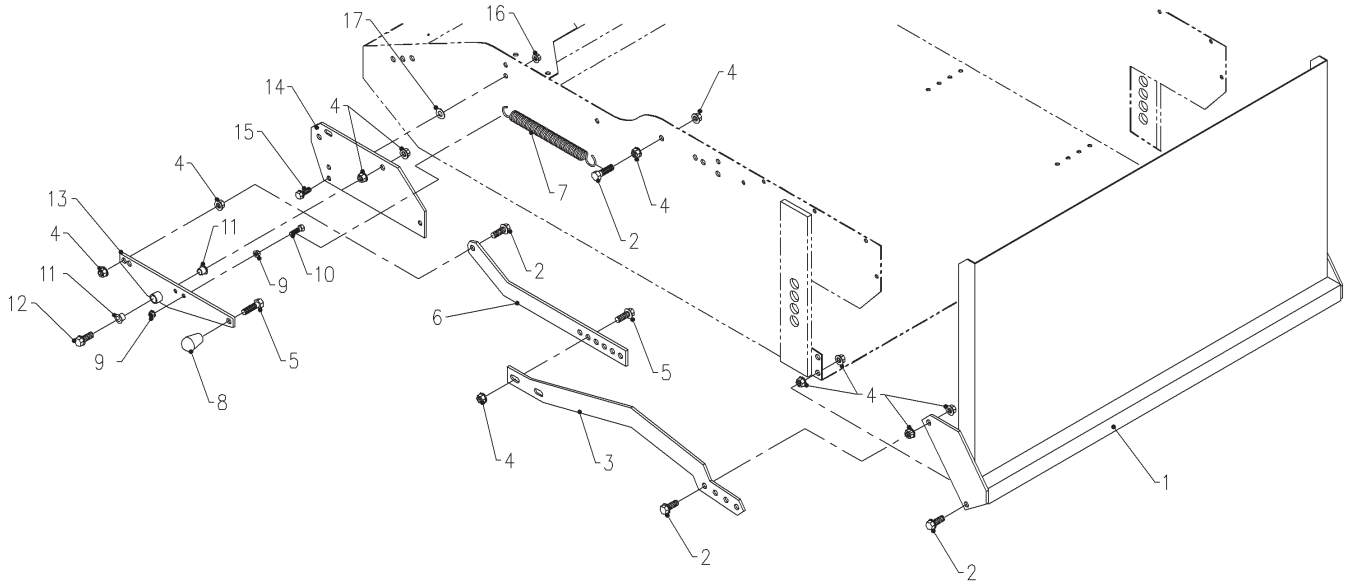

TAILGATE MECHANISM

REF.	PART NO.	DESCRIPTION	QTY.
1	62.0749	Tailgate	1
2	90.0610	3/8-16 x 1-1/4 Bolt	4
3	42.0378	Tailgate Rear Link	1
4	99.SF06	3/8-16 Flange Nut	13
5	99.SF0606	3/8-16 x 3/4 Flange Bolt	2
6	42.0379	Tailgate Front Link	1
7	41.0054	3/4 x 6-1/2 Extension Spring	1
8	47.0001	Knob	1
9	99.SF04	1/4-20 Flange Nut	2
10	90.0408	1/4-20 x 1 Bolt	1
11	85.B0068	3/8 x 1/2 Nylon Bushing	2
12	90.0618	3/8-16 x 2-1/4 Bolt	1
13	40.0230	Tailgate Control Lever	1
14	64.0629	Lever Anchor	1
15	99.SF0506	5/16-18 x 3/4 Flange Bolt	3
16	99.SF05	5/16-18 Flange Nut	3
17	95.05	5/16 SAE Flat Washer	3

ILLUSTRATED DRAWING
BRAKE MECHANISM

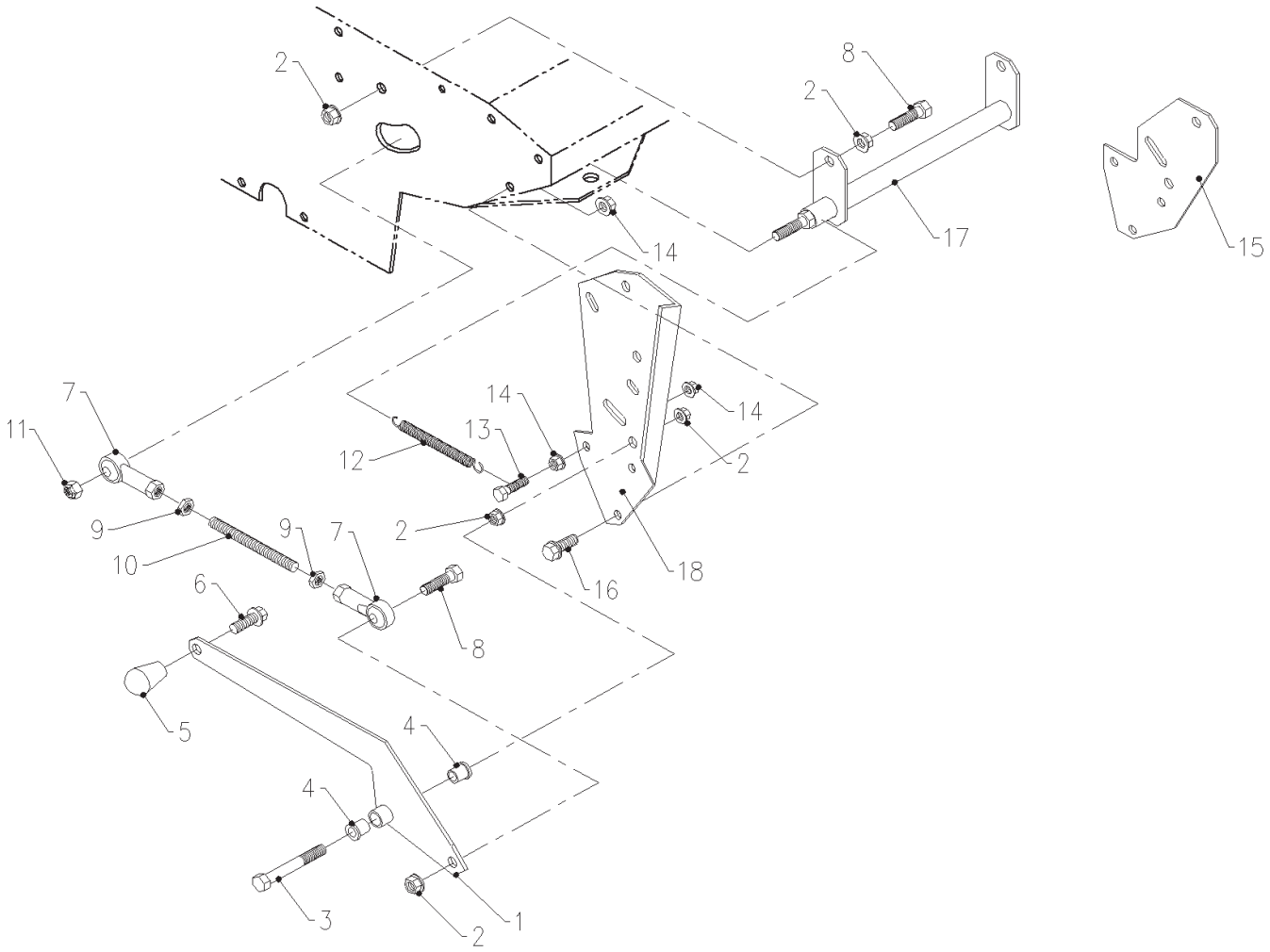

BRAKE MECHANISM

REF.	PART NO.	DESCRIPTION	QTY.
1	40.0244	Brake Handle.	1
2	99.SF06	3/8-16 Flange Nut	9
3	90.0618	3/8-16 x 2-1/4 Bolt	1
4	85.B0068	3/8 x 1/2 Nylon Bushing	2
5	47.0001	Knob	1
6	99.SF0606	3/8-16 x 3/4 Flange Bolt	1
7	43.006	3/8 Spherical Rod End	2
8	90.0610	3/8-16 x 1-1/4 Bolt	2
9	93.06	3/8-24 Nut	2
10	99.j0668NF	Brake Link	1
11	99.A06	3/8-16 Lock Nut	1
12	41.0052	3/8 x 3-3/4 Extension Spring	1
13	90.0508	5/16-18 x 1 Bolt	1
14	99.SF05	5/16-18 Flange Nut.	4
15	64.0636	Right Handle Bar Mounting Plate	1
16	99.SF0506	5/16-18 x 3/4 Flange Bolt	2
17	42.0377	Brake Rod	1
18	64.0689	Left Handle Bar Mounting Plate	1

ILLUSTRATED DRAWING
PUMP CONTROLS

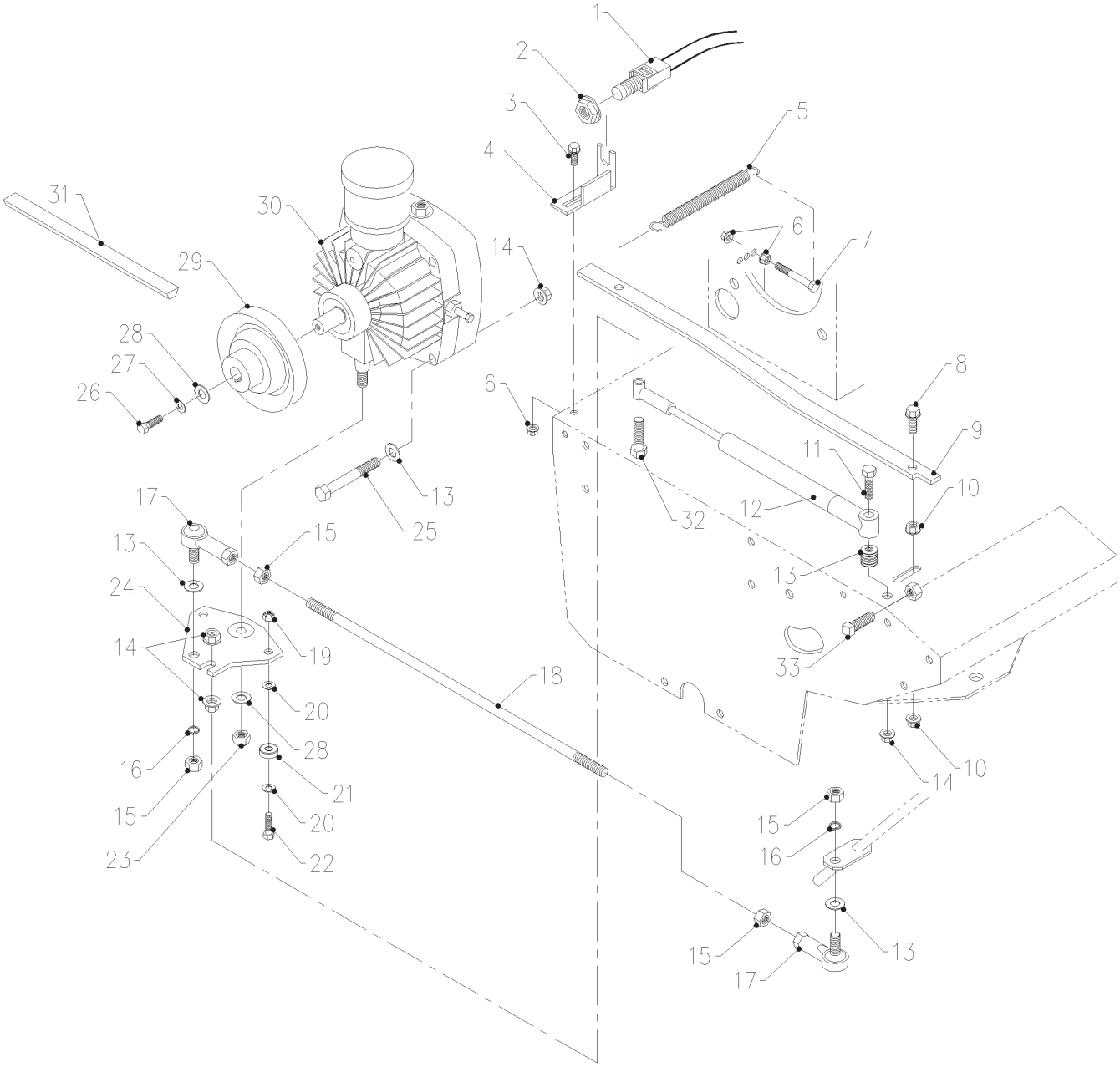

PUMP CONTROLS

REF.	PART NO.	DESCRIPTION	QTY.
1	31.0031	Neutral Start Switch	1
2	99.E0051	Plastic Nut	1
3	99.SF0406	1/4-20 x 3/4 Flange Bolt	2
4	64.0638	Neutral Switch Bracket	1
5	41.0053	9/16 x 5 Extension Spring	1
6	99.SF04	1/4-20 Flange Nut	2
7	90.0412	1/4-20 x 1-1/2 Bolt	1
8	90.0508	5/16-18 x 1 Bolt	1
9	40.0233	Neutral Lever	1
10	99.SF05	5/16-18 Flange Nut	2
11	90.0616	3/8-16 x 2 Bolt	1
12	47.0002	Stabilizer	1
13	95.06	3/8 SAE Flat Washer	12
14	99.SF06	3/8-16 Flange Nut	7
15	93.06	3/8-24 Nut	4
16	96.06	3/8 Lock Washer	2
17	43.006S	3/8 Studded Spherical Rod End	2
18	42.0382	Shift Link Rod	1
19	99.A05	5/16-18 Lock Nut	2
20	95.06	5/16 SAE Flat Washer	4
21	55.0022	Ball Bearing	2
22	90.0508	5/16-18 x 1 Bolt	2
23	99.A06	3/8-16 Lock Nut	1
24	64.0635	Pump Arm	1
25	90.0622	3/8-16 x 2-3/4 Bolt	4
26	90.0406	1/4-20 x 3/4 Bolt	1
27	94.04	1/4 USS Flat Washer	1
28	94.06	3/8 USS Flat Washer	2
29	83.0017	Pulley	1
30	21.0077	Hydraulic Pump	1
31	81.AX027	AX27 Belt	1
32	90.0612	3/8-16 x 1-1/2 Bolt	1
33	85.SS03	3/8-16 x 1 Square Head Set Screw	1

ILLUSTRATED DRAWING
DRIVE WHEEL

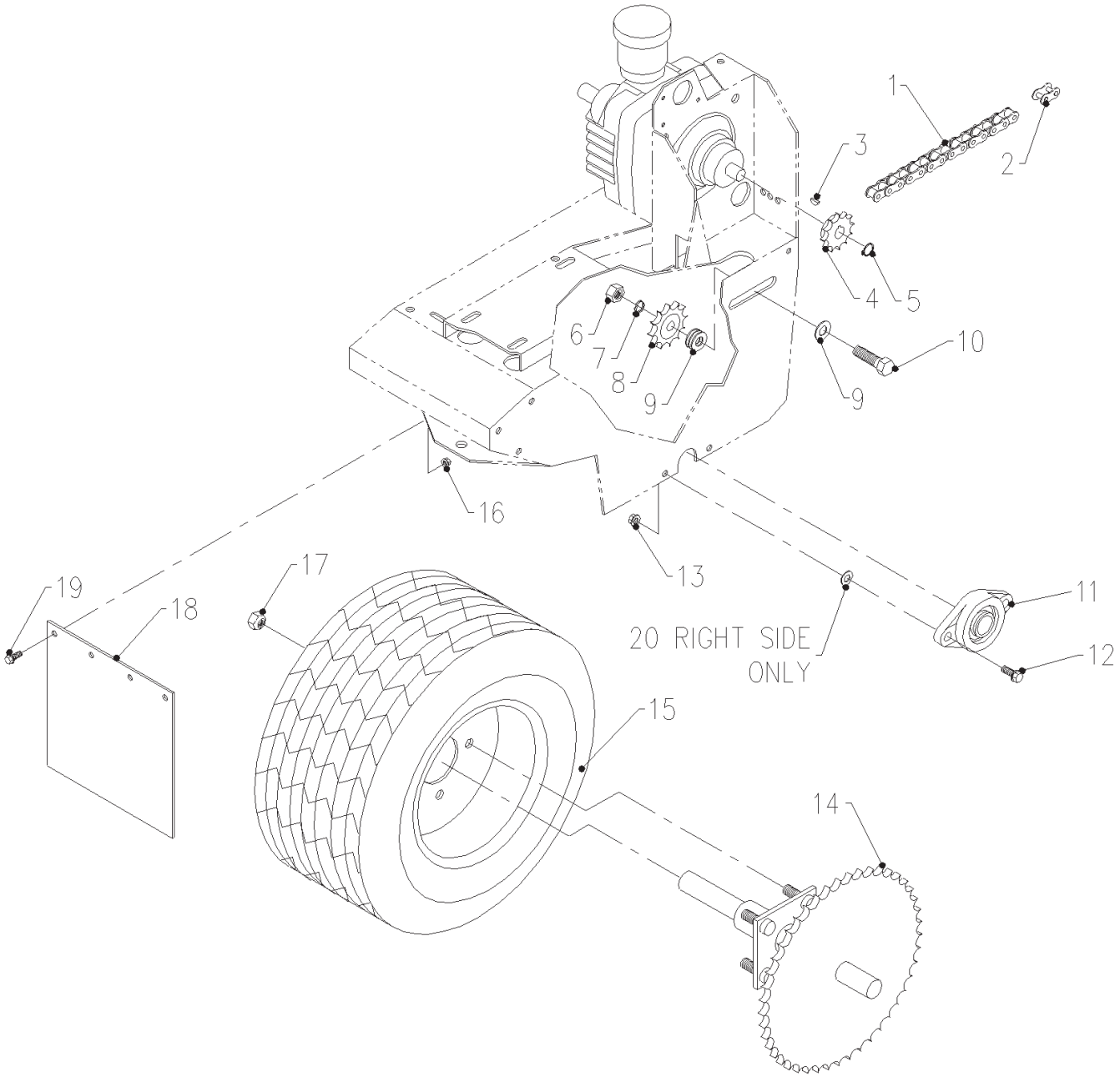

DRIVE WHEEL

REF.	PART NO.	DESCRIPTION	QTY.
1	81.0125	#50 Roller Chain x 51”	1
2	81.0053	#50 Connector Link	1
3	85.W0204	1/8 x 1/2 Woodruff Key	1
4	82.0087	Sprocket	1
5	04.0015	Snap Ring	1
6	92.08	1/2-13 Nut	1
7	96.08	1/2 Lock Washer	1
8	83.5015E08	Idler Sprocket	1
9	94.08	1/2 USS Flat Washer	4
10	90.0816	1/2-13 x 2 Bolt	1
11	55.FB16016	1” Flange Block Bearing	2
12	99.SF0508	5/16-18 x 1 Flange Bolt	4
13	99.SF05	5/16-18 Flange Nut	4
14	50.0048	Drive Wheel Axle	1
15	53.0082	Drive Wheel Assembly	1
16	99.SF04	1/4-20 Flange Nut	4
17	99.E0001	1/2-20 Lug Nut	4
18	44.0153	Mud Flap	1
19	99.SF0404	1/4-20 x 1/2 Flange Bolt	4
20	94.05	5/16 USS Flat Washer	2

ILLUSTRATED DRAWING
ENGINE

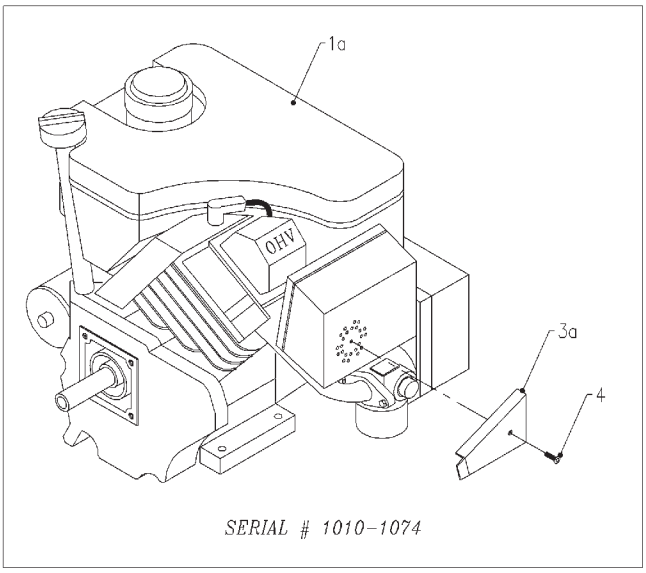

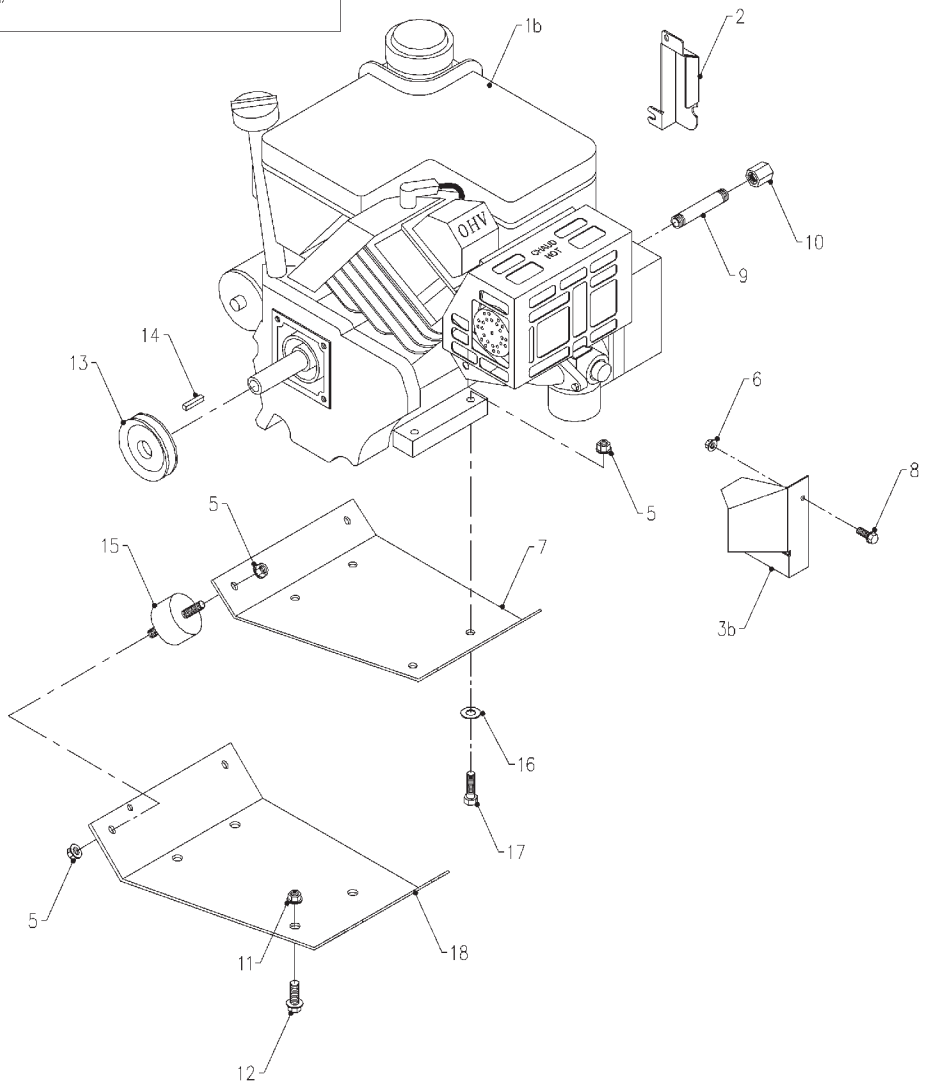

ENGINE

REF.	PART NO.	DESCRIPTION	QTY.
1a	13.0046	5.5 hp Tecumseh Engine (serial # 1010-1074)	1
1b	13.0207	6.5 hp Tecumseh Engine (serial # 1075 -)	1
2	60.0902	Shield, Throttle Cable	1
3a	14.0005	Exhaust Deflector (serial # 1010-1074)	1
3b	60.0901	Exhaust Deflector (serial # 1075 -)	1
4	99.K0068	8-32 x 3/4 SS Machine Screw (serial # 1010-1074)	1
5	99.SF05	5/16-18 Flange Nut	12
6	99.E0035	10-32 Flange Nut (serial # 1075 -)	1
7	64.0637	Engine Mount Plate	1
8	99.K0062	10-32 x 1/2 Machine Screw (serial # 1075 -)	1
9	29.N0432G	1/4 x 4 Galvanized Pipe Nipple	1
10	29.C04	1/4 Pipe Cap	1
11	99.SF06	3/8-16 Flange Nut	4
12	99.SF0606	3/8-16 x 3/4 Flange Bolt	4
13	83.AS2512	Pulley	1
14	85.K0310	3/16 x 1-1/4 Key	1
15	05.0039	Isolator	4
16	94.05	5/16 USS Flat Washer	4
17	90.0512	5/16-18 x 1-1/2 Bolt	4
18	64.0659	Isolator Mount Plate	1

ILLUSTRATED DRAWING
HANDLE BAR & CONTROLS

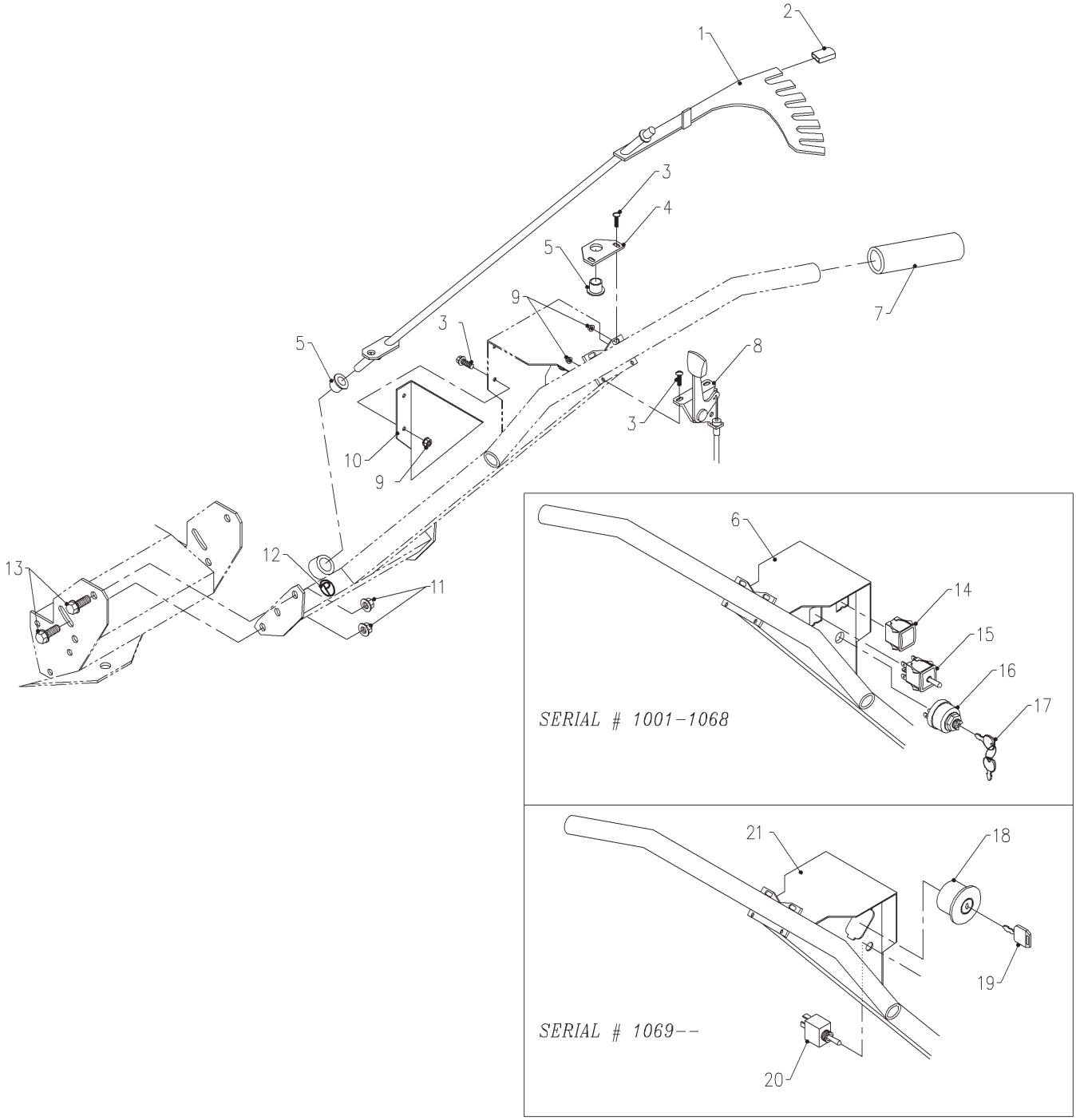

HANDLE BAR & CONTROLS

REF.	PART NO.	DESCRIPTION	QTY.
1	40.0232	Forward/Reverse/Speed Control Lever	1
2	06.0044	Plastic Cap	8
3	99.K0062	10-32 x 1/2 Machine Screw	6
4	64.0639	Top Handle Pivot	1
5	85.B0027	1/2 x 5/8 Nylon Bushing	2
6	62.0748	Handle Bar (serial # 1001-1068)	1
7	47.0111	Handle Bar Grip	2
8	47.0106	Throttle Cable	1
9	99.E0035	10-32 Flange Nut.	6
10	60.0642	Switch Box Cover	1
11	99.SF06	3/8-16 Flange Nut	4
12	00.0129	Decal, Parking Brake.	1
13	99.SF0606	3/8-16 x 3/4 Flange Bolt	4
14	31.0030	Dummy Plug (serial # 1001-1068)	1
15	31.0022	Light Switch (serial # 1001-1068)	1
16	13.0043	Ignition Switch (serial # 1001-1068)	1
17	13.0036	Ignition Key (serial # 1001-1068).	1
18	13.0078	Ignition Switch (serial # 1069 -)	1
19	13.0080	Ignition Key (serial # 1069 -)	1
20	31.0034	Light Switch (serial # 1069 -).	1
21	62.0934	Handle Bar (serial # 1069 -)	1

ILLUSTRATED DRAWING
COAST LEVER & ELECTRICAL PARTS

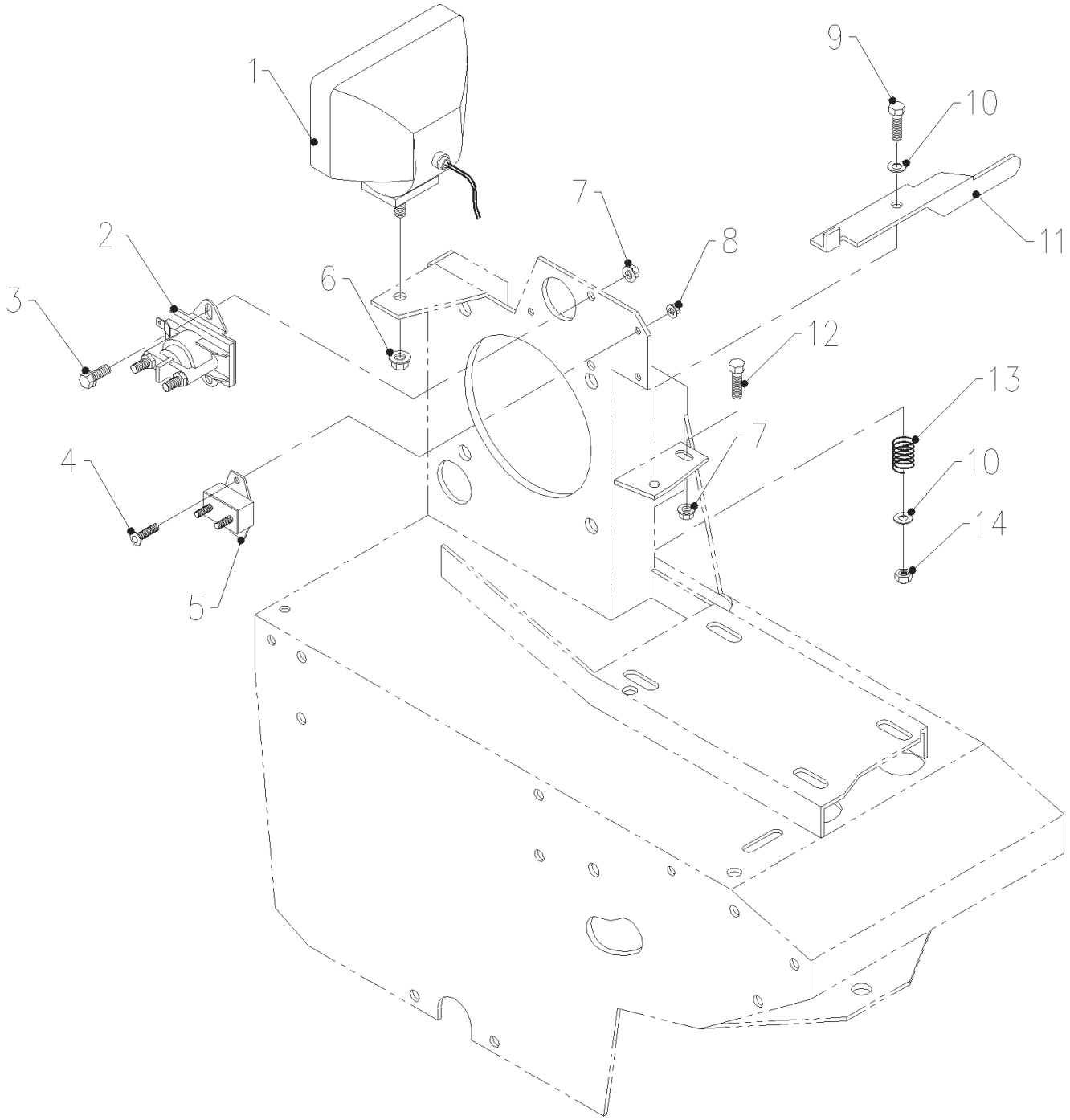

COAST LEVER & ELECTRICAL PARTS

REF.	PART NO.	DESCRIPTION	QTY.
1	33.0021	Headlight	1
2	35.0092	Solenoid	1
3	99.SF0404	1/4-20 x 1/2 Flange Bolt	2
4	99.K0062	10-32 x 1/2 Machine Screw	2
5	30.0149	15 Amp Circuit Breaker	1
6	99.SF05	5/16-18 Flange Nut	1
7	99.SF04	1/4-20 Flange Nut	3
8	99.E0035	10-32 Flange Nut	2
9	90.0410	1/4-20 x 1-1/4 Bolt	1
10	94.04	1/4 USS Flat Washer	2
11	40.0236	Coast Lever	1
12	90.0404	1/4-20 x 1/2 Bolt	1
13	41.0039	Compression Spring	1
14	99.A04	1/4-20 Lock Nut	1

ILLUSTRATED DRAWING
SHIELDS & BATTERY

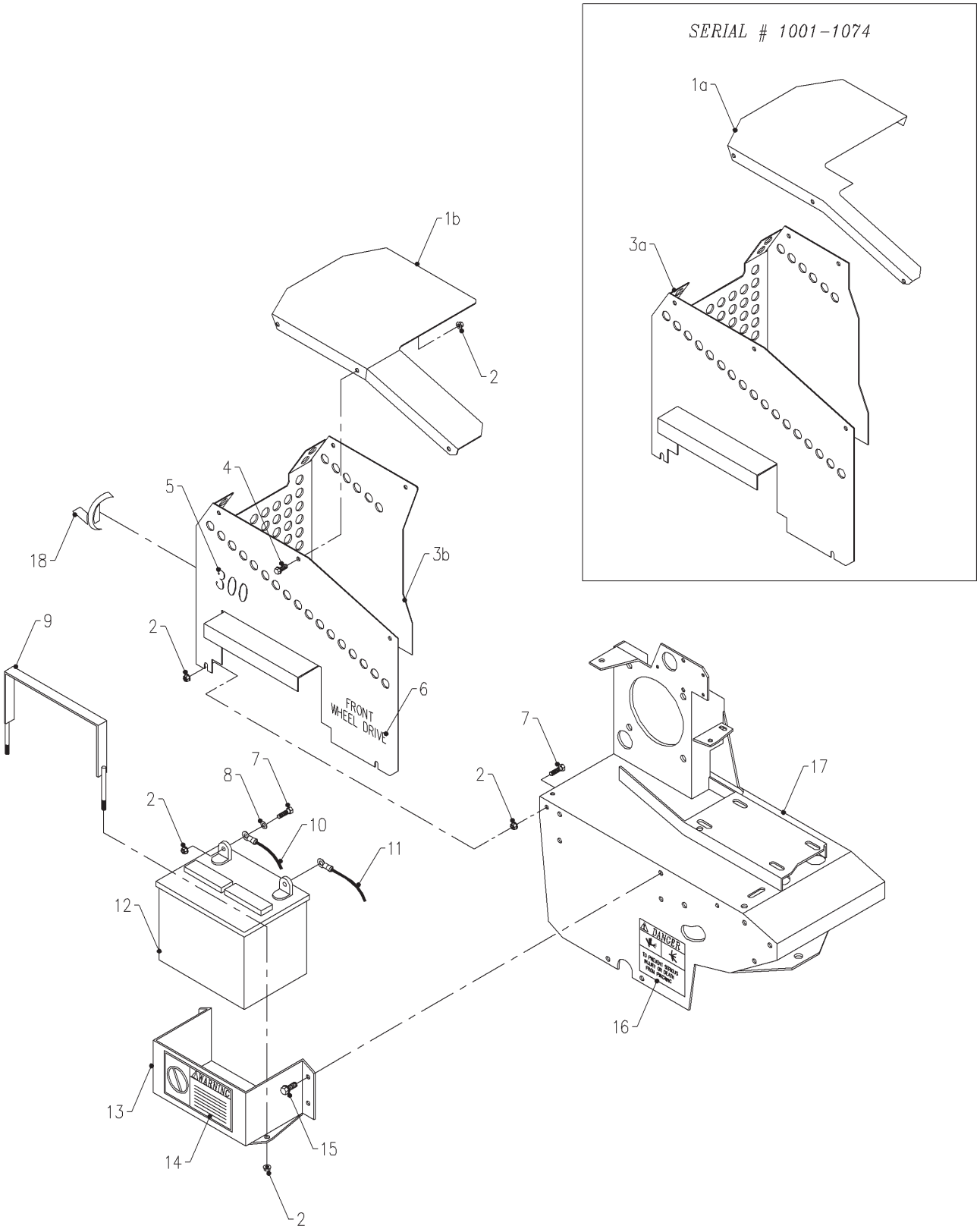

SHIELDS & BATTERY

REF.	PART NO.	DESCRIPTION	QTY.
1a	60.0643	Hood (serial # 1001-1074)	1
1b	60.0908	Hood (serial # 1075 -)	1
2	99.SF04	1/4-20 Flange Nut	15
3a	60.0641	Drive Shield (serial # 1001-1074)	1
3b	60.0907	Drive Shield (serial # 1075 -)	1
4	99.SF0404	1/4-20 x 1/2 Flange Bolt	6
5	00.0134	Decal, 300	2
6	00.0119	Decal, Front Wheel Drive	2
7	90.0406	1/4-20 x 3/4 Bolt	6
8	94.04	1/4 USS Flat Washer	2
9	64.0634	Battery Hold-down	1
10	34.1001-1001	Negative Battery Cable Assembly	1
11	34.1003-1006	Positive Battery Cable Assembly	1
12	33.0026	Battery	1
13	64.0630	Battery Box	1
14	00.0124	Decal, Warning Battery - Gases	1
15	99.SF0506	5/16-18 x 3/4 Flange Bolt	4
16	00.0102	Decal, Danger - Pinching Hazard	2
17	62.0747	Drive Frame	1
18	00.0192	Decal, V	1

ILLUSTRATED DRAWING
GUN RACK

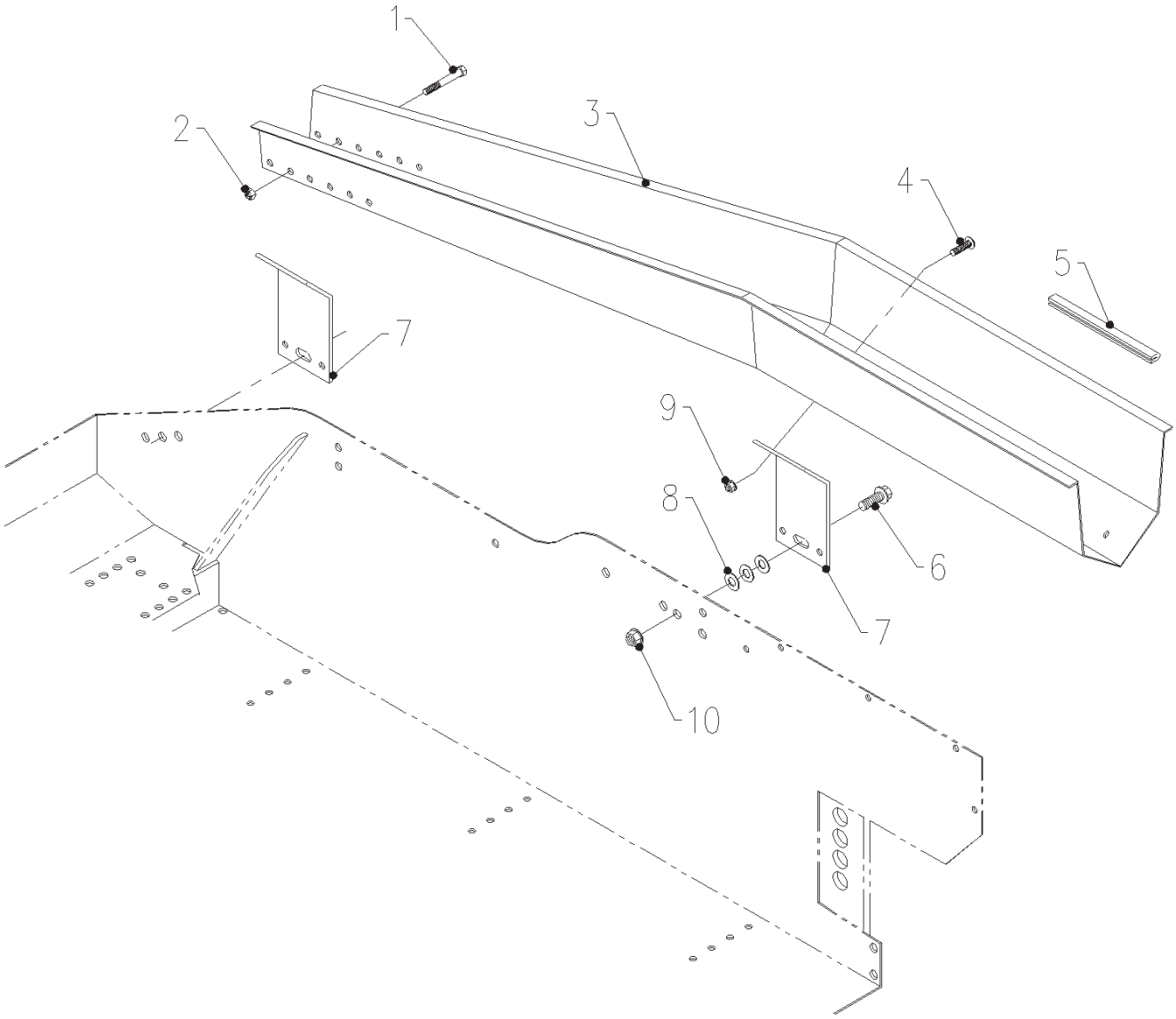

GUN RACK

REF.	PART NO.	DESCRIPTION	QTY.
1	90.0424	1/4-20 x 3 Bolt	1
2	99.A04	1/4-20 Lock Nut	1
3	60.0647	Gun Rack	1
4	99.K0066	1/4-20 x 1/2 Machine Screw	6
5	06.0042*	*Trim Loc x 46-1/4”	2
6	99.SF0606	3/8-16 x 3/4 Flange Bolt	2
7	64.0640	Mounting Bracket	2
8	94.06	3/8 USS Flat Washer	6
9	99.SF04	1/4-20 Flange Nut	6
10	99.SF06	3/8-16 Flange Nut	2

*06.0042 is sold by the foot. Specify length when ordering.

ILLUSTRATED DRAWING
BRAKE LEVER EXTENSION

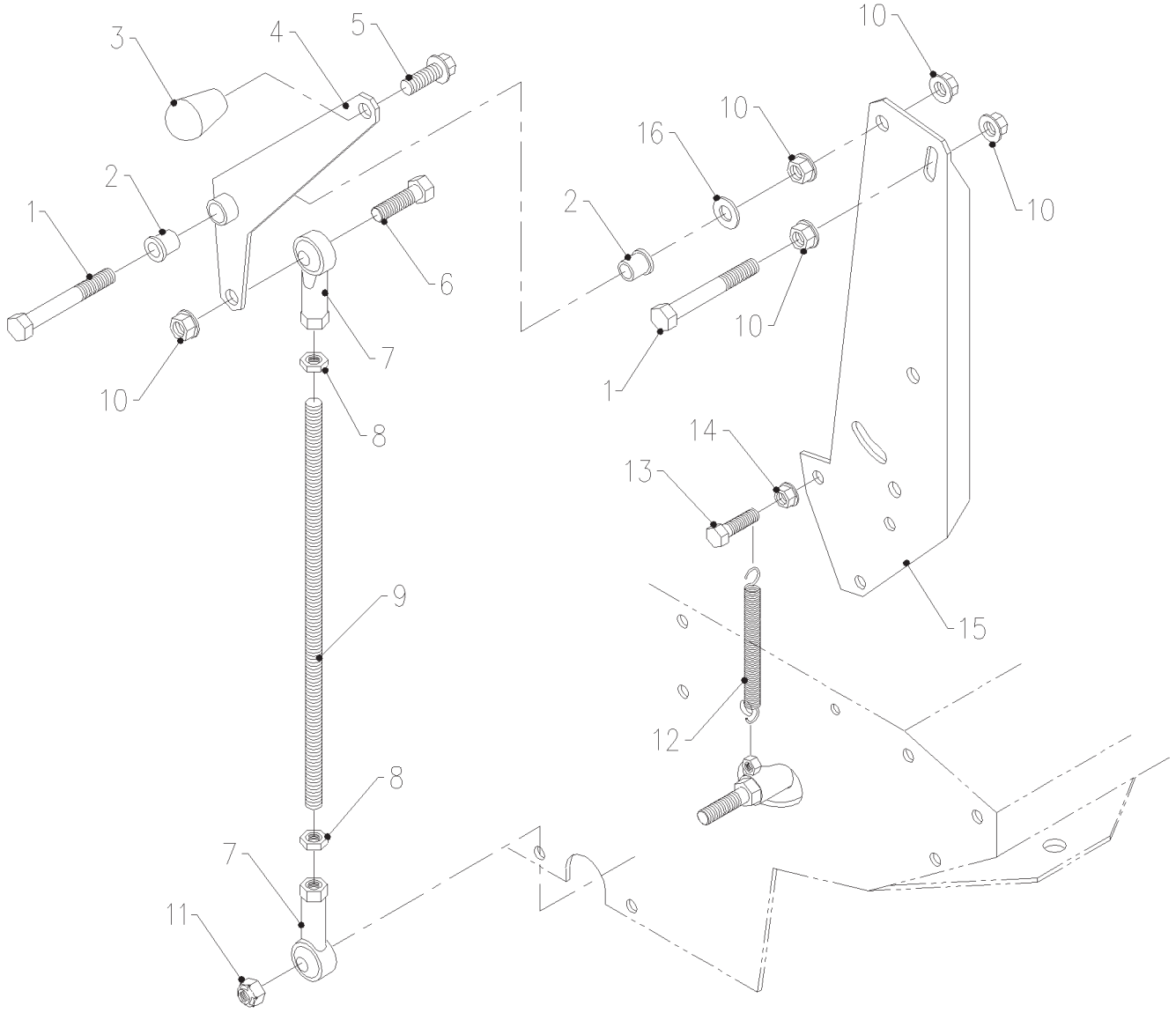

BRAKE LEVER EXTENSION

REF.	PART NO.	DESCRIPTION	QTY.
1	90.0618	3/8-16 x 2-1/4 Bolt	2
2	85.B0068	3/8 x 1/2 Nylon Bushing	2
3	47.0001	Knob	1
4	40.0231	Brake Lever	1
5	99.SF0606	3/8-16 x 3/4 Flange Bolt	1
6	90.0610	3/8-16 x 1-1/4 Bolt	1
7	43.006	3/8 Spherical Rod End	2
8	93.06	3/8-24 Nut	2
9	99.J0696NFZ	Brake Link	1
10	99.SF06	3/8-16 Flange Nut	5
11	99.A06	3/8-16 Lock Nut	1
12	41.0052	3/8 x 3-3/4 Extension Spring	1
13	90.0512	5/16-18 x 1-1/2 Bolt	1
14	99.SF05	5/16-18 Flange Nut	2
15	64.0662	Mounting Plate	1
16	95.06	3/8 SAE Flat Washer	1

ILLUSTRATED DRAWING
RAMP / TAILGATE LEVER EXTENSION

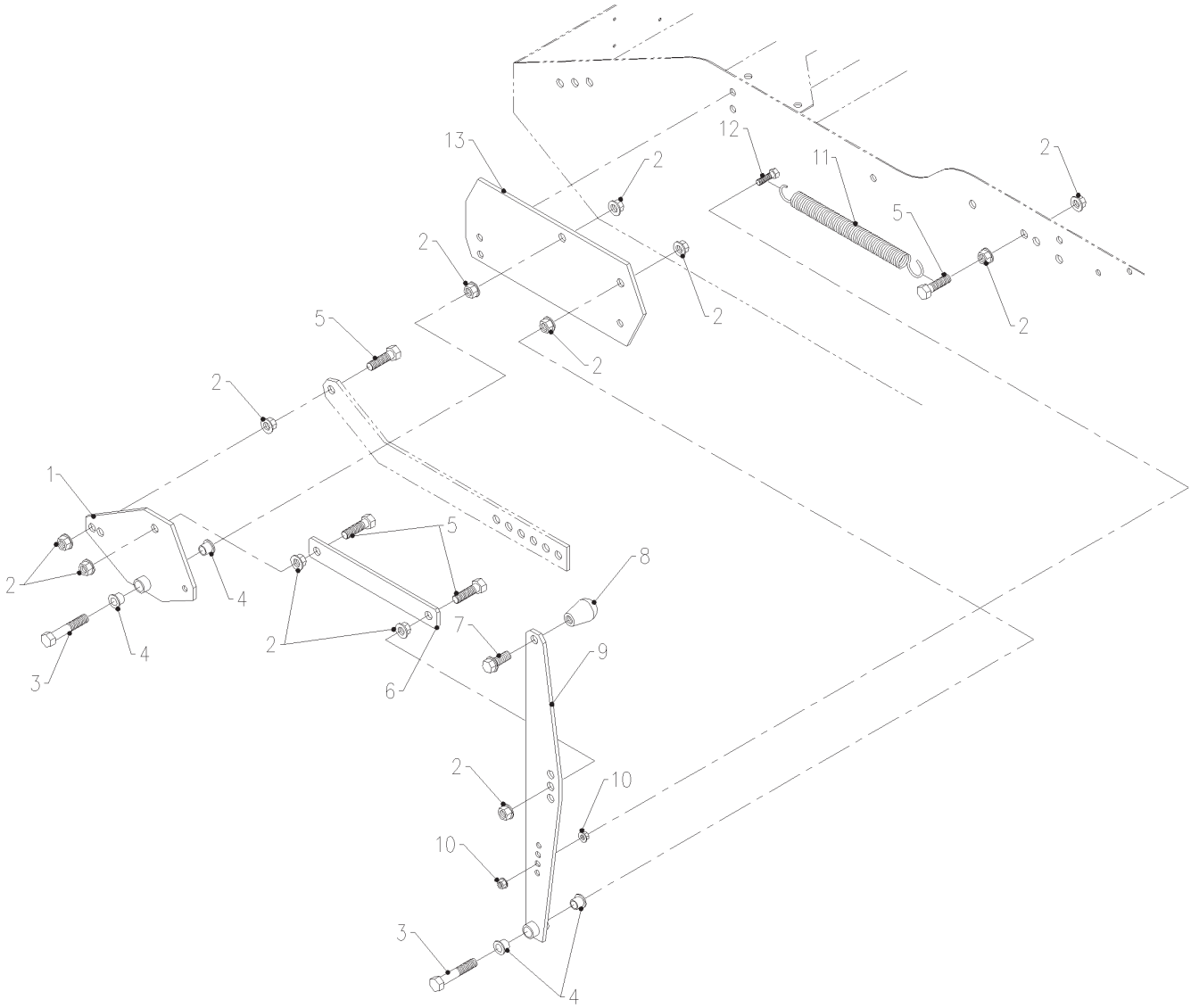

RAMP / TAILGATE LEVER EXTENSION

REF.	PART NO.	DESCRIPTION	QTY.
1	64.0664	Rocker	1
2	99.SF06	3/8-16 Flange Nut	12
3	90.0618	3/8-16 x 2-1/4 Bolt	2
4	85.B0068	3/8 x 1/2 Nylon Bushing	4
5	90.0610	3/8-16 x 1-1/4 Bolt	4
6	42.0384	Link	1
7	99.SF0606	3/8-16 x 3/4 Flange Bolt	1
8	47.0001	Knob	1
9	40.0237	Control Lever	1
10	99.SF04	1/4-20 Flange Nut	2
11	41.0054	3/4 x 6-1/2 Extension Spring	1
12	90.0408	1/4-20 x 1 Bolt	1
13	64.0663	Mounting Plate	1

ILLUSTRATED DRAWING
TACHOMETER / HOUR METER

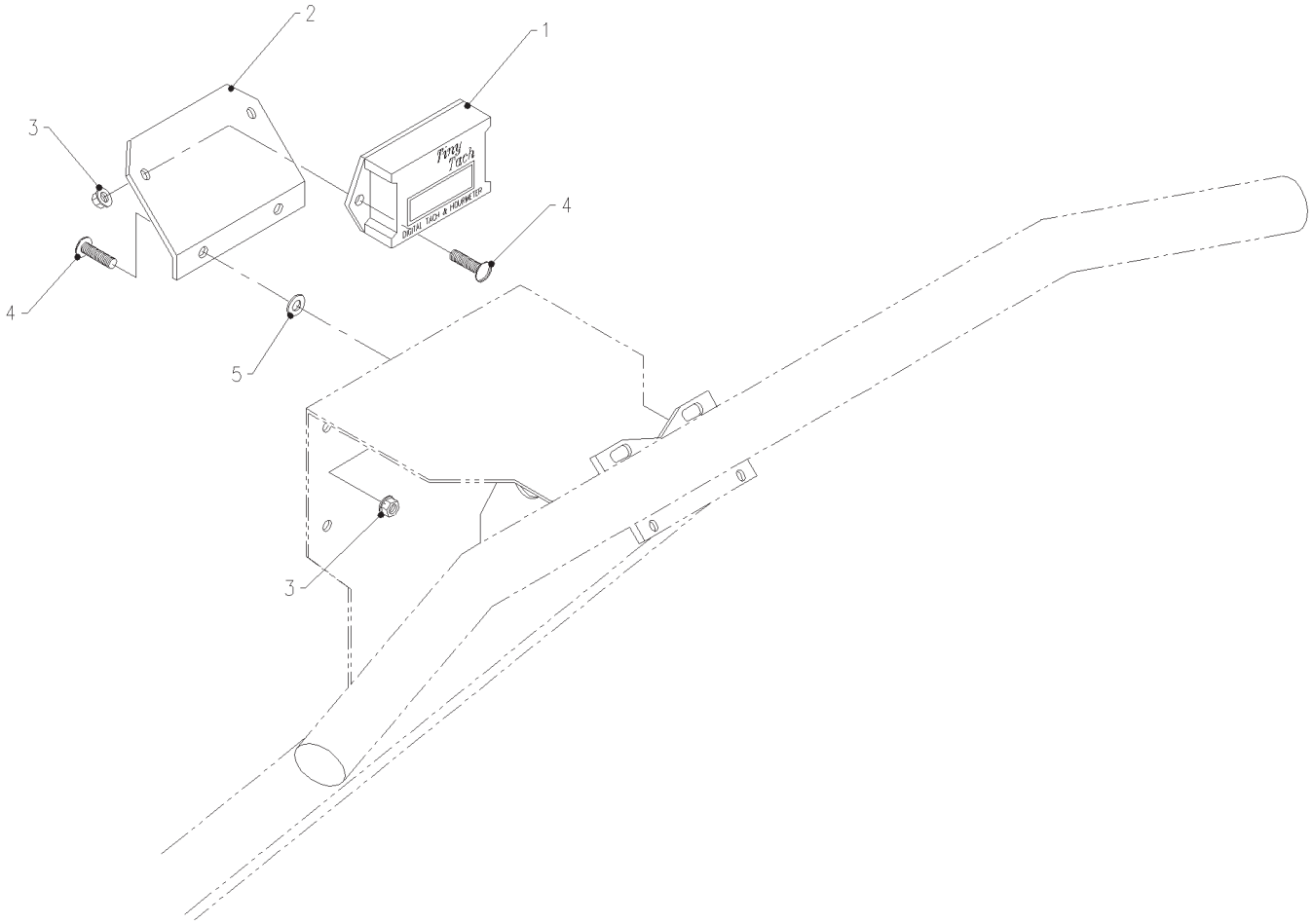

TACHOMETER / HOUR METER

REF.	PART NO.	DESCRIPTION	QTY.
1	13.0031	Digital Tachometer/Hour Meter	1
2	64.0652	Mount Bracket	1
3	99.E0035	10-32 Flange Nut.	4
4	99.K0062	10-32 x 1/2 Machine Screw	4
5	99.B0051	#10 Flat Washer	2
6^	30.0130*	*1/4” Corrugated Loom x 18	1

^ Not shown.

*30.0130 is sold by the foot. Specify length when ordering.

LIMITED WARRANTY – VENTRAC TURF EQUIPMENT

Venture Products, Inc. (shall be referred to as *V.P.I.*) warrants on the terms and conditions herein, that it will repair, replace, or adjust any part manufactured by *Venture Products* Inc. and found by *Venture Products Inc* to be defective in material and / or workmanship.

Effective September 1st 2005, *Ventrac* warranty on Tractors & Attachments (excluding the HG100/HG150 generator) for **Residential use only** is limited to **Three (3) years** from original purchase date. Ventrac Tractors & Attachments used **Commercially or for any income producing purpose** is limited to **Two (2) years** from original purchase date. *Ventrac* ET200 turbine blower (turbine only) is limited to **Two (2) years** from original purchase date. *Ventrac* HG100/HG150 generator is limited to **One (1) year** from original purchase date. *Ventrac* Tractors & Attachments used for **Rental** is limited to **180 days** from original purchase date. (**NOTE:** All accessories such as: 3-point hitch, foot pedal, dual wheel kit, etc. will be covered under the above warranty periods as they would apply provided they are installed by an Authorized *Ventrac* Dealer.) This warranty may be transferred and will carry the remainder of the warranty starting from the Original Purchase/Registration date with the dealership and/or *V.P.I.* In the event that product/s originally registered as **(3) year Residential use** are to be transferred to a commercial user the warranty would change to the remainder of **(2) year Commercial use** starting from the Original Purchase/Registration date with the dealership and/or *V.P.I.*

If this warranty covers a consumer product as defined by the Magnusson-Moss warranty act, no warranties, express or implied, (including, but not limited to, the warranty of merchantability or fitness for a particular purpose) shall extend beyond the applicable time period stated in bold face type above.

If this warranty covers a product used commercially or for any income producing purpose, the foregoing warranties are in lieu of all other warranties and no representations, guarantees or warranties, express or implied, (including, but not limited to, a warranty of merchantability or fitness for a particular purpose), are made by *V.P.I.* in connection with the manufacture or sale of its products.

The engine warranty is covered by its respective engine manufacturer. Please refer to the engine manufacturer's warranty statement that is included in the owner's manual.

The *Ventrac* turf equipment, including any defective parts, must be returned to an Authorized *Ventrac* Dealer within the warranty period. The warranty shall extend to the cost to repair or replace (as determined by *V.P.I.*) the defective part. **The expense of pickup and delivery of equipment, service call drive time or any transportation expense incurred for warranty repair is the sole responsibility of the owner and is not covered under warranty by *Ventrac and/or V.P.I.*** *V.P.I.'s* responsibility in respect to claims is limited to making the required repairs or replacements, and no claim of breach of warranty shall be cause for cancellation or rescission of the contract of sale of any *Ventrac* equipment. Proof of purchase may be required by the dealer to substantiate any warranty claim. Only warranty work performed and submitted by an Authorized *Ventrac* Dealer may be eligible for warranty credit.

This warranty extends only to *Ventrac* turf equipment operated under normal conditions and properly serviced and maintained. The warranty expressly does **NOT** cover: (a) any defects, damage or deterioration due to normal use, wear and tear, or exposure; (b) normal maintenance services, such as cleaning, lubrication, oil change; (c) replacement of service items, such as oil, lubricants, spark plugs, belts, rubber hoses or other items subject to normal service replacement; (d) damage or defects arising out of, or relating to abuse, misuse, neglect, alteration, negligence or accident; (e) repair or replacement arising from

operation of, or use of the turf equipment which is not in accordance with operating instructions as specified in the operator's manual or other operational instructions provided by *V.P.I.*; (f) repair or replacement arising as a result of any operation from Ventrac turf equipment that has been altered or modified so as to, in the determination of *V.P.I.*, adversely affect the operation, performance or durability of the equipment or that has altered, modified or affected the turf equipment so as to change the intended use of the product; (g) repair or replacement necessitated by the use of parts, accessories or supplies, including gasoline, oil or lubricants, incompatible with the turf equipment or other than as recommended in the operator's manual or other operational instructions provided by *V.P.I.;* (h) repairs or replacements resulting from parts or accessories which have adversely affected the operation, performance or durability of the turf equipment; or (i) damage or defects due to or arising out of repair of *Ventrac* turf equipment by person or persons other than an authorized *Ventrac* service dealer or the installation of parts other than genuine *Ventrac* parts or *Ventrac* recommended parts.

The sole liability of *V.P.I.* with respect to this warranty shall be repair and replacement as set forth herein. *V.P.I.* shall have no liability for any other cost, loss, or damage. In particular *V.P.I* shall have no liability or responsibility for: (i) expenses relating to gasoline, oil, lubricants; (ii) loss, cost or expense relating to transportation or delivery of turf equipment from the location of owner or location where used by owner to or from any Authorized *Ventrac* Dealer; (iii) travel time, overtime, after hours time or other extraordinary repair charges or charge relating to repairs or replacements outside of normal business hours at the place of business of an Authorized *Ventrac* Dealer; (iv) rental of like or similar replacement equipment during the period of any warranty repair or replacement work; (v) any telephone or telegram charges; (vi) loss or damage to person or property other than that covered by the terms of this warranty; (vii) any claims for lost revenue, lost profit or additional cost or expense incurred as a result of a claim of breach of warranty; or (viii) attorney's fees.

The remedies of buyer set forth herein are exclusive and are in lieu of all other remedies. The liability of *V.P.I.*, whether in contract, tort, under any warranty, or otherwise, shall not extend beyond its obligation as set forth herein. *V.P.I.* shall not be liable for cost of removal or installation nor shall *V.P.I.* be responsible for any direct, indirect, special or consequential damages of any nature. In no event shall *V.P.I.* be liable for any sum in excess of the price received for the goods for which liability is claimed.

There are no representations or warranties which have been authorized to the buyer of the turf equipment other than set forth in this warranty. Any and all statements or representations made by any seller of this equipment, including those set forth in any sales literature or made orally by any sales representative, are superceded by the terms of this warranty. Any affirmation of fact or promise made by *V.P.I.* or any of its representatives to the buyer which relates to the goods that are the subject to this warranty shall not be regarded as part of the basis of the bargain and shall not be deemed to create any express warranty that such goods shall conform to the affirmation or promise.

No employee, distributor, or representative is authorized to change the foregoing warranties in any way or grant any other warranty on behalf of *V.P.I.*

Some states do not allow limitations on how long an implied warranty lasts or allow the exclusion on limitation of incidental or consequential damages, so the above limitation or exclusion may not apply to you.

This warranty gives you specific legal rights, and you may also have other rights which vary from state to state.

This warranty applies to all *Ventrac* turf equipment sold in the United States and Canada.