OWNER/OPERATOR'S MANUAL & PARTS LIST

SNOWBLOWER

MODEL LS420

REVISED 02-28-03

Venture Products Inc. Orrville, OH

09.10037

VENTRAC
VENTURE PRODUCTS INC

Orrville, OH

www.ventrac.com

TO THE OWNER

*Congratulations on the purchase of a new VENTRAC **LS420 Snow Blower!** The purpose of this manual is to assist you in its safe and effective operation and maintenance.*

*With proper usage and care, the **Snow Blower** will provide many years of service. Please read and understand this manual entirely before using the **Snow Blower**. Keep this manual on file for future reference.*

Always give Model and Serial # when ordering service parts.

Please fill in the following information for future reference:

Date of Purchase: Month _____ Day _____ Year _____

Model Number: _____

Serial Number: _____

Dealer: _____

Dealer Address: _____

_____

Dealer Phone Number: _____

Dealer FAX Number: _____

Venture Products Inc. reserves the right to make changes in design or specifications without incurring obligation to make like changes on previously manufactured products.

TABLE OF CONTENTS

INTRODUCTION — Section A

Description & Specifications A-1

SAFETY — Section B

Decals B-1
Safety B-2
Safety Operation & Techniques B-3
Rotating Augers B-4

OPERATION — Section C

Attaching C-1
Detaching C-1

MAINTENANCE — Section D

Bearing Lubrication D-1
Gearbox Lubrication D-1
Belt Replacement. D-1
Chute Adjustment D-2
Skid Shoe Adjustment D-2

PARTS & ILLUSTRATED DRAWINGS — Section E

Auger and Cutting Edge . . . . . E-1 & 2
Main Frame . . . . . E-3 & 4
Tower Parts . . . . . E-5 & 6
Chute Parts . . . . . E-7 & 8
Hydraulics and Pulleys . . . . . E-9 & 10

WARRANTY

INTRODUCTION

Product Description

The Ventrac Model LS420 Snowblower is a unique high capacity snowblower that combines the simplicity and economy of a single stage blower with the high performance of a two stage blower.

An aggressive double spiral auger from each side converges separately on each of the four rotor paddles. The saw-tooth auger perimeter, the sure-fed center paddles and the high velocity discharge make a powerful, efficient snow moving attachment for the Ventrac 3000.

Ventrac LS420 Specifications

Width	**42 inches**
Height	**42 inches**
Length	**36 inches**
Weight	**350 pounds**

DECALS

The following decals must be maintained on your Ventrac snowblower. If any decals are faded or missing, contact the factory promptly for replacements.

A

B

C

D

E

Decal	Page & Location	Description	Part Number
A	E-3, #10 (2)	Keep Hands and Feet Away	00.0123
B	E-3, #26	High Pressure Fluid Hazard	00.0103
C	E-3, #23	Hazard-Moving Part	00.0101
D	E-7, #14	Thrown Object Hazard	00.0122

Safety

- Please read and understand this manual before operating the equipment.
- Always use proper safety precautions. Observe all safety decals.
- Before adjusting, cleaning, lubricating, or changing parts on the blower, set tractor brake, stop the engine and remove ignition key.
- All shields and guards must be in place during operation.
- Be sure attachment is locked securely to tractor (power unit) before operating.
- Be sure bystanders are clear of tractor and blower before operating.
- Never allow anyone to ride on the blower or tractor. Be especially careful and observant when people are present. Never drive or blow snow toward people.
- Never assume that bystanders will remain where you saw them last.
- Always look in the direction the tractor is moving.
- Be alert for any sign of equipment failure. An unusual noise can be a sign or warning of something needing immediate attention.
- Never direct the discharge chute toward people, animals, buildings, vehicles or objects of value.
- **Operate the blower in the float position on hard surfaces.** On gravel and/or to increase front tire traction, lift and carry the blower.
- Do not blow snow that contains stones, sticks or other foreign objects that may be thrown.
- Use common sense!

This symbol identifies potential health and safety hazards. It marks safety precautions!!

Safety Operation & Techniques

The snowblower is an aggressive power attachment for moving snow, especially snow that may be too deep for a snow plow or that needs to be piled or thrown some distance.

The design and the power used to move snow must be effective to break up snow and to throw it for relocation. This also makes the snowblower a lethal "weapon" when misused. Operators should be extremely careful never to direct the snow blower attachment or its discharge chute toward people or anything of value. Even discharged snow from the machine can be solid enough to cause serious injury. Frozen snow, ice, gravel and other objects can be thrown at deadly speeds.

Operators should know the area being cleared and make preparations ahead of time. Place guide stakes appropriately, remove stones or markers of any kind that will become invisible after a snow fall. Curbs, offsets, steps, manholes, broken pavement, etc. should be noted. Operators are encouraged to map the area(s) to be cleared before the snow fall season to remind the operator of potential hazards. If an area is to be cleared that is unfamiliar to the operator, travel slowly and use EXTREME CAUTION. Inquire of anyone who might know of potential hazards.

The operator should never proceed if visibility is poor. Keep the tractor windshield clear, wait for blinding snow storms and squalls to subside and discharge snow with the wind direction as much as possible.

Extra care should be used when clearing snow from gravel drive and road ways. Adjust the skid shoes to an appropriate setting. The snow blower may be lifted by the tractor hitch to a height that avoids picking up gravel.

Never attempt to clean out the snow blower or work on, fix or maintain any part with the tractor running. **ALWAYS stop the engine and remove the key!**

This symbol identifies potential health and safety hazards. It marks safety precautions!!

Rotating Augers Are Dangerous

DO NOT let children or any untrained person operate tractor/blower.

Shut off PTO when you are not blowing snow.

Use extra care when you come to shrubs, trees, or other objects that may block your vision.

Cooperate with the direction of wind as much as possible. Discharging snow against the wind reduces the throw distance and generally reduces visibility by creating a “snow storm” effect.

DO NOT operate tractor if you are under the influence of alcohol, drugs or not feeling well.

Always stop the blower and engage the park brake before dismounting to adjust the end deflector or the discharge chute. Shut off the tractor engine before attempting to clean or unplug the blower.

Many different circumstances and situations can occur for which the operator must determine a safe way to operate the tractor and snow blower. Always follow safety procedures and always use common sense.

Approach every task with an underlying consideration for your safety as well as for the safety of anyone who happens to be near your work area. Make sure that all operators of this equipment are thoroughly trained in using it safely.

Never direct the discharge chute toward people or anything that could be damaged by a thrown object!

Always “play it safe!” Snow removal can be very important, even urgent, but one careless move can be far more serious!

Operating Instructions

Attaching:

The parked snow blower will have its hitch arms positioned for reattachment.

1. Drive the tractor slowly into the hitch arms. Align the hitch arms with the mating arms on the blower. It may be necessary to slightly raise or lower the hitch to complete the engagement.
2. Once completely engaged, close the front hitch latch.
3. Stop the tractor engine.
4. Place attachment belt over the PTO drive pulley on the tractor.
5. Engage the PTO spring tension lever. (Make sure the belt is properly engaged in each pulley).
6. Couple the discharge chute hoses to the right side quick couplers.
7. **Always direct discharge chute toward open areas.**

Detaching:

Reverse the above process.

MAINTENANCE

BEARING LUBRICATION

A bearing on each end of the auger rotor should be greased with 1 to 2 pumps of grease at the beginning and end of the season. Before storing, run the auger for a minute or two to distribute the new grease throughout the bearing.

GEARBOX LUBRICATION

EP 80-90 weight gear lube is recommended. Lubricant level should be checked before the unit is placed in service and periodically thereafter. Fill unit approximately half full. Lubricant should be changed after the first 100 hours or 30 days of operation. Then change at the end of each season to remove moisture and corrosive contaminants.

BELT REPLACEMENT

PTO belt from the VENTRAC 3000 to the snow blower gearbox pulley is listed on page E-10.

The two (2) auger drive belts are B42.

A small A20 V-belt rotates the discharge chute. It is tensioned by the chute pivot bolt. Loosen the lower nut and move the pivot bolt in the mounting slot enough to create enough tension to operate the chute in the full 180 degree arc. The belt will slip enough to reposition itself with the 180 degree arc by a full stroke of the cylinder in both directions.

CHUTE ADJUSTMENT

1. The discharge deflectors can be hand adjusted to several different settings. Release the links by a side pull and move the deflectors to the desired angles and re-engage the links.

2. At the base of the discharge chute are four (4) composite rollers. Each is adjustable in a mounting slot. Rollers should be free to turn but otherwise secured firmly to the frame. Discharge chute rollers can be adjusted to reduce misalignment, vibration or looseness.

SKID SHOE ADJUSTMENT

1. Skid shoes are provided to lift the blower especially when clearing snow on gravel drives and roadways. Several mounting positions are available. After adjusting, be sure to secure each of the three (3) skid bolts properly.

2. At the base of the discharge chute are four (4) composite rollers. Each is adjustable in a mounting slot. Rollers should be free to turn but otherwise secured firmly to the frame. Discharge chute rollers can be adjusted to reduce misalignment, vibration or looseness.

ILLUSTRATED DRAWING
AUGER & CUTTING EDGE

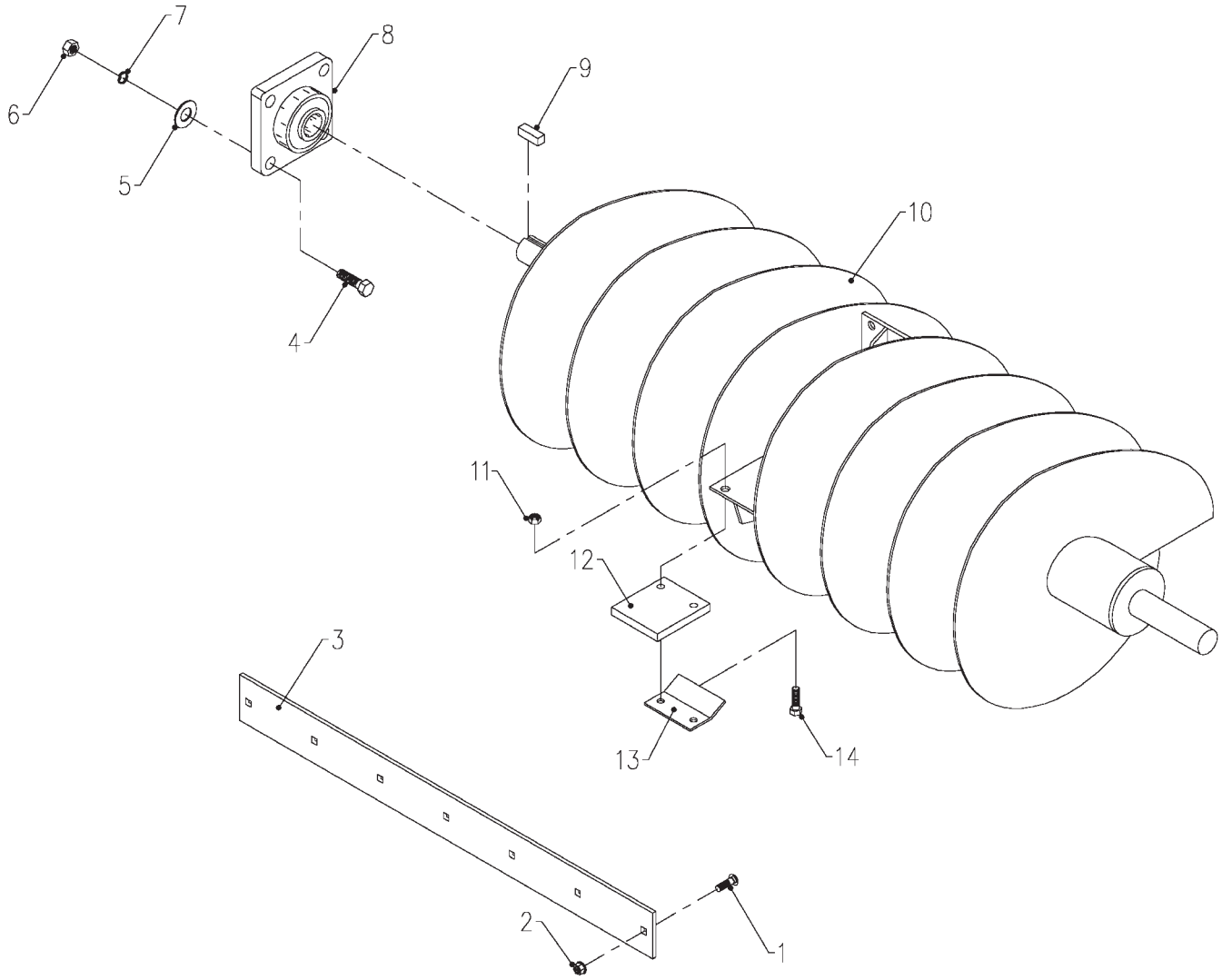

AUGER & CUTTING EDGE

REF.	PART NO.	DESCRIPTION	QTY.
1	97.0606	3/8-16 X 3/4 Carriage Bolt	6
2	99.SF06	3/8-16 Flange Nut	6
3	78.0045	Cutting Edge	1
4	90.0812	1/2-13 x 1-1/2 Bolt	8
5	95.08	1/2” SAE Washer	8
6	92.08	1/2-13 Nut	8
7	96.08	1/2” Lock Washer	8
8	55.FB22024	1-1/2” Flange Block Bearing	2
9	85.K0610	3/8” x 1-1/4 Key	1
10	80.0308	Auger	1
11	99.A06	3/8-16 Lock Nut	8
12	44.0181	Rubber Paddle	4
13	64.0875	Paddle Clamp Plate	4
14	90.0610	3/8-16 x 1-1/4 Bolt	8

ILLUSTRATED DRAWING
MAIN FRAME

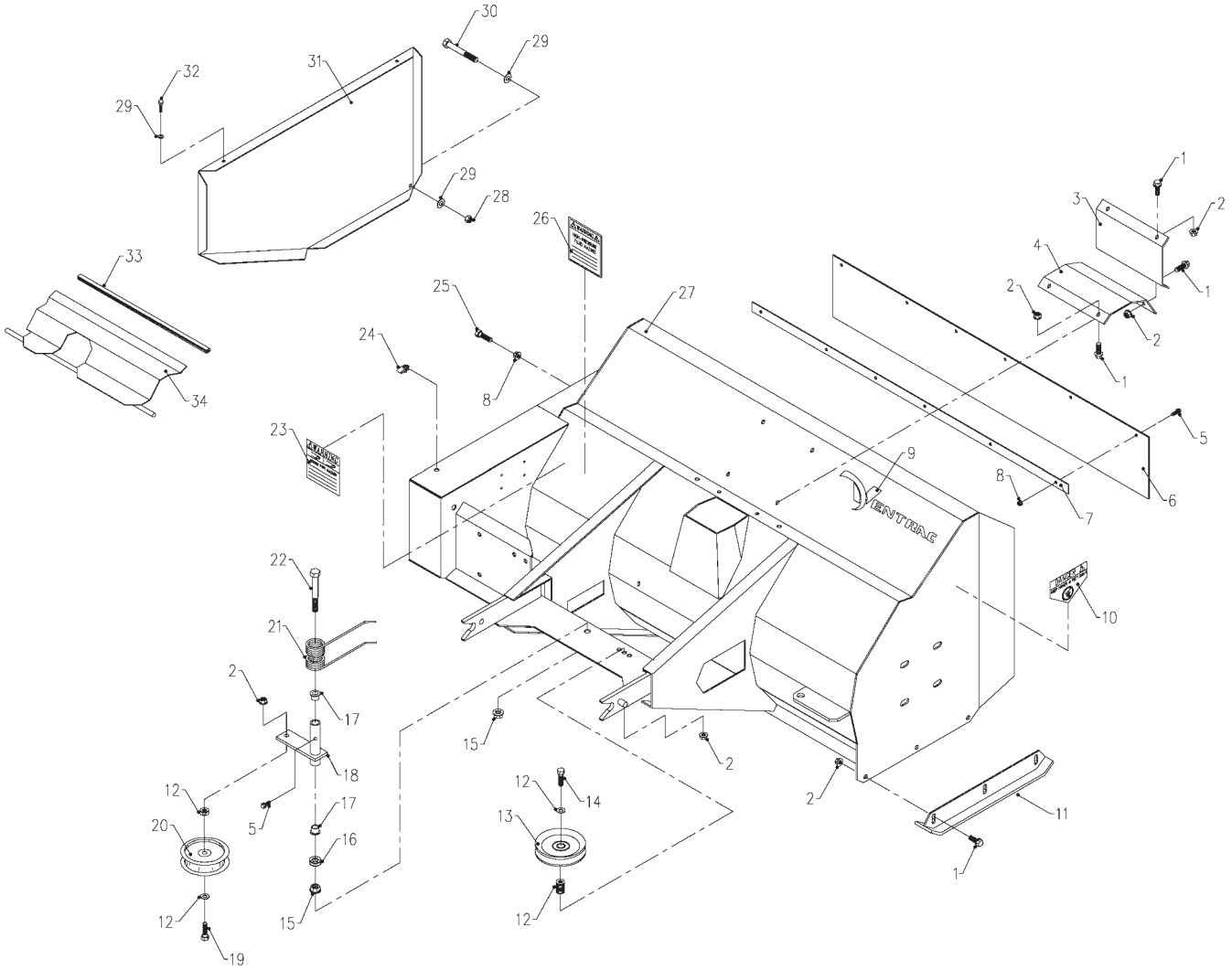

MAIN FRAME

REF.	PART NO.	DESCRIPTION	QTY.
1	99.SF0606	3/8-16 x 3/4 Flange Bolt	12
2	99.SF06	3/8-16 Flange Nut	14
3	64.0831	Snow Guide Bracket Support	1
4	64.0830	Snow Guide Bracket	1
5	99.SF0404	1/4-20 x 1/2 Flange Bolt	6
6	44.0182	Belting Curtain	1
7	64.0879	Belting Clamp Bar	1
8	99.SF04	1/4-20 Flange Nut	7
9	00.0189	Decal - Ventrac	1
10	00.0123	Decal - Keep Hands and Feet Away	2
11	62.0875	Skid Shoe	2
12	95.06	3/8” SAE Washer	10
13	83.0038	4-1/4” V-Idler Pulley	1
14	90.0614	3/8-16 x 1-3/4 Bolt	1
15	99.SF08	1/2-13 Flange Nut	2
16	95.08	1/2” SAE Washer	2
17	85.B0027	1/2” ID x 5/8 OD Bushing	2
18	40.0288	Drive Belt Tension Arm	1
19	90.0612	3/8-16 x 1-1/2 Bolt	1
20	83.0037	4” Flat Idler Pulley	1
21	41.0065	Double Torsion Spring	1
22	90.0844	1/2-13 x 5-1/2 Bolt	1
23	00.0101	Decal - Hazard - Moving Part	1
24	99.E0046	1/4-20 U-Nut	2
25	90.0412	1/4-20 x 1-1/2 Bolt	1
26	00.0103	Decal - High Pressure Fluid Hazard	1
27	62.0880	Main Frame	1
28	99.A04	1/4-20 Lock Nut	2
29	95.04	1/4” SAE Washer	6
30	90.0426	1/4-20 x 3-1/4 Bolt	2
31	60.0776	Side Belt Cover	1
32	90.0406	1/4-20 x 3/4 Bolt	2
33	*06.0042	*Trim Lock x 16”	1
34	64.0883	Belt Cover	1

*06.0042 is sold by the foot. Specify length when ordering.

REVISED 02-24-03

ILLUSTRATED DRAWING
TOWER PARTS

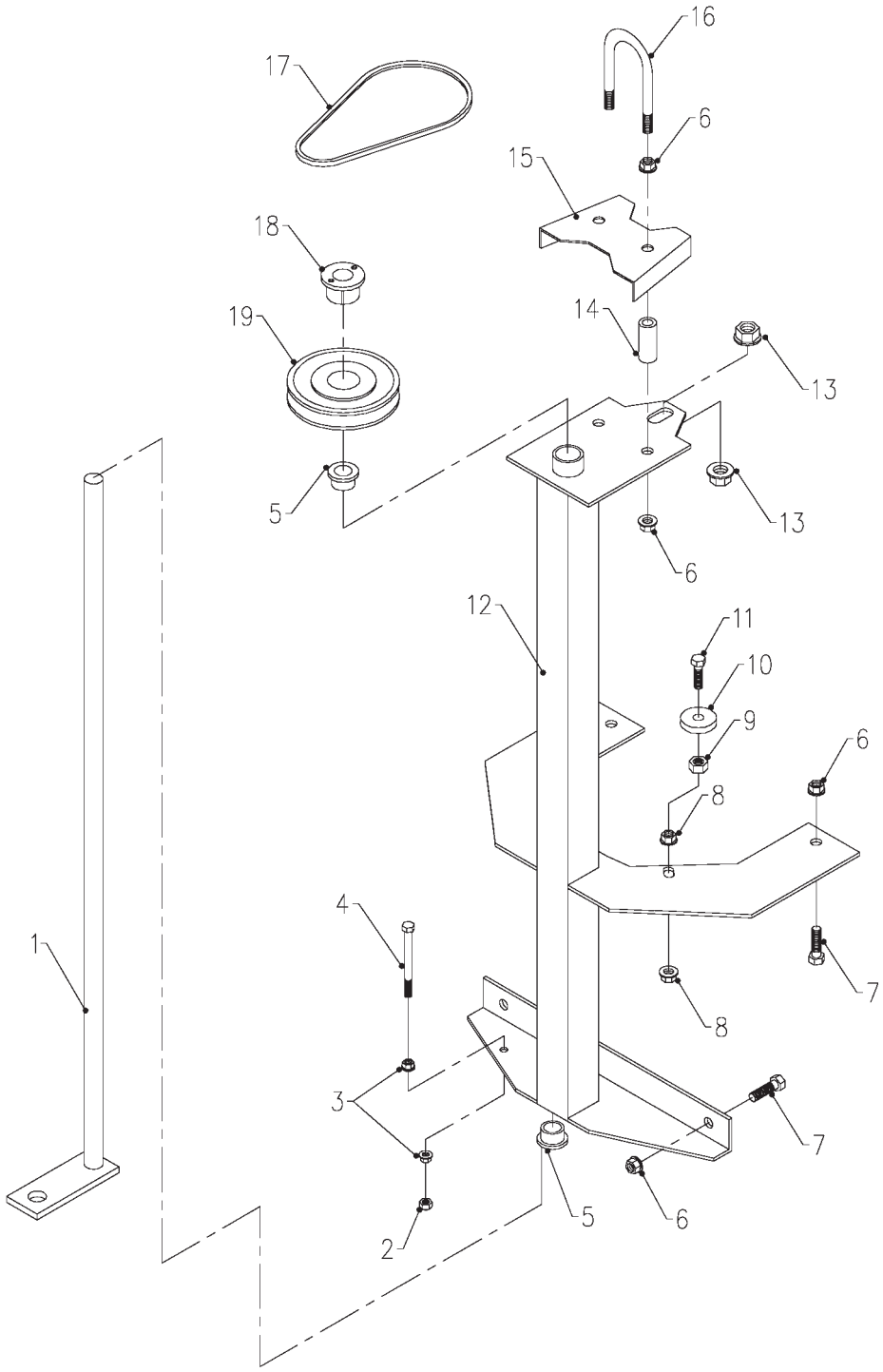

TOWER PARTS

REF.	PART NO.	DESCRIPTION	QTY.
1	64.0828	Cylinder Rotation Rod	1
2	99.A04	1/4-20 Lock Nut	1
3	99.SF04	1/4-20 Flange Nut	2
4	99.F0040	1/4-20 Spring Anchor Bolt	1
5	85.B0065	5/8” ID x 13/16 OD Bushing	2
6	99.SF06	3/8-16 Flange Nut	8
7	90.0606	3/8-16 x 3/4 Bolt	4
8	99.SF05	5/16-18 Flange Nut	8
9	92.06	3/8-16 Nut	4
10	05.0069	Nylon Washer	4
11	90.0510	5/16-18 x 1-1/4 Bolt	4
12	62.0874	Chute Mount Post	1
13	99.SF08	1/2-13 Flange Nut	2
14	64.0836	Cap Plate Spacer	2
15	60.0773	Cap Plate	1
16	11.0055	3/8-16 x 1-1/2 U-Bolt	1
17	81.A020	A20 Belt	1
18	83.H10	5/8” H Bushing	1
19	83.AK51H	5.1” AK Pulley	1

ILLUSTRATED DRAWING
CHUTE PARTS

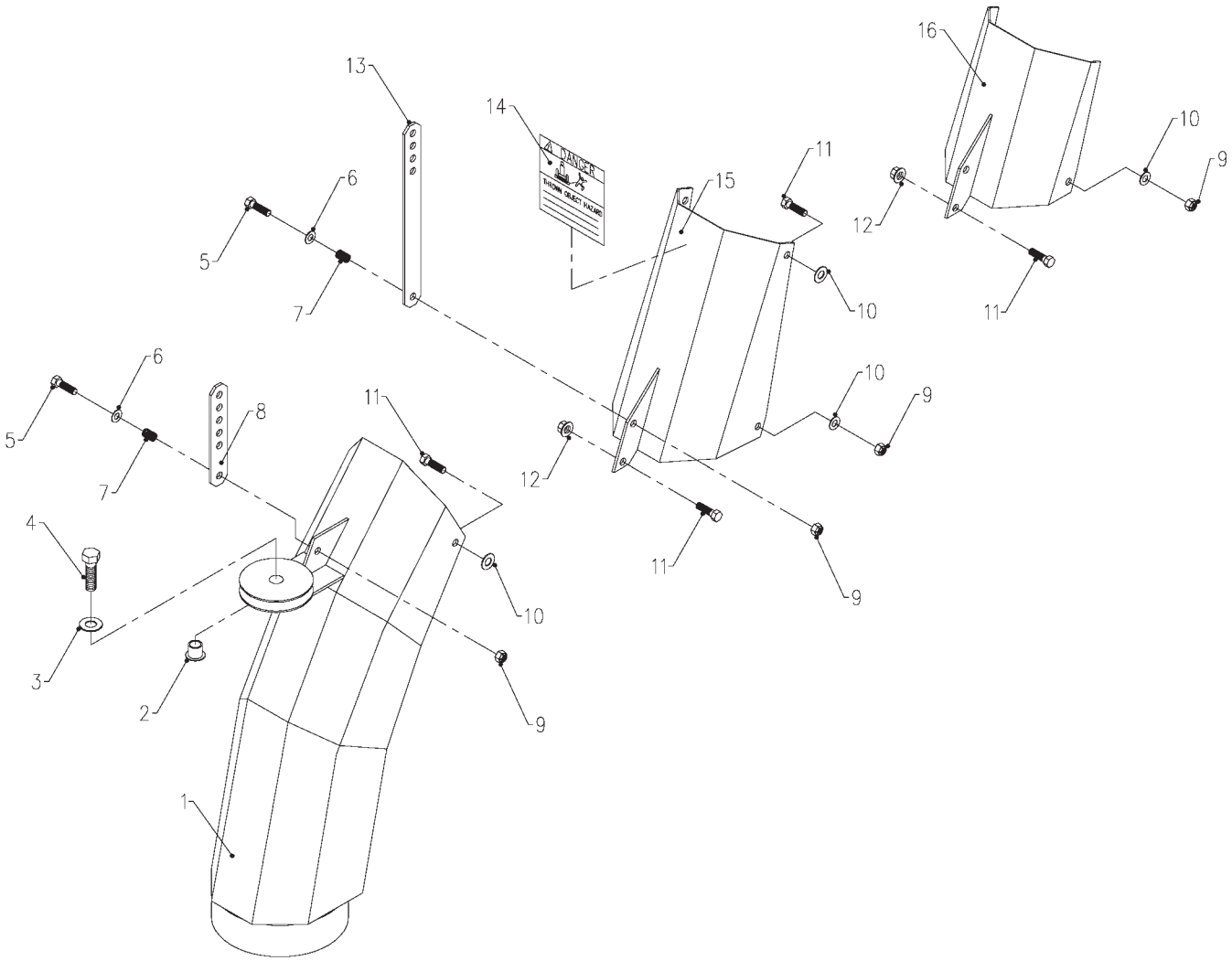

CHUTE PARTS

REF.	PART NO.	DESCRIPTION	QTY.
1	62.0844	Main Chute	1
2	85.B0027	1/2” ID x 5/8 OD Bushing	1
3	95.08	1/2” SAE Washer	1
4	90.0816	1/2-13 x 2 Bolt	1
5	90.0512	5/16-18 x 1-1/2 Bolt	2
6	95.05	5/16” SAE Washer	2
7	41.0039	9/16” OD x 5/8 Compression Spring	2
8	42.0423	Main Chute Tilt Link	1
9	99.A05	5/16-18 Lock Nut	6
10	95.06	3/8” SAE Washer	8
11	90.0506	5/16-18 x 3/4 Bolt	6
12	99.SF05	5/16-18 Flange Nut	2
13	42.0427	Extension Chute Tilt Link	1
14	00.0122	Decal - Thrown Object Hazard	1
15	62.0845	Extension Chute	1
16	64.0878	Second Extension Chute	1

ILLUSTRATED DRAWING
HYDRAULICS & PULLEYS

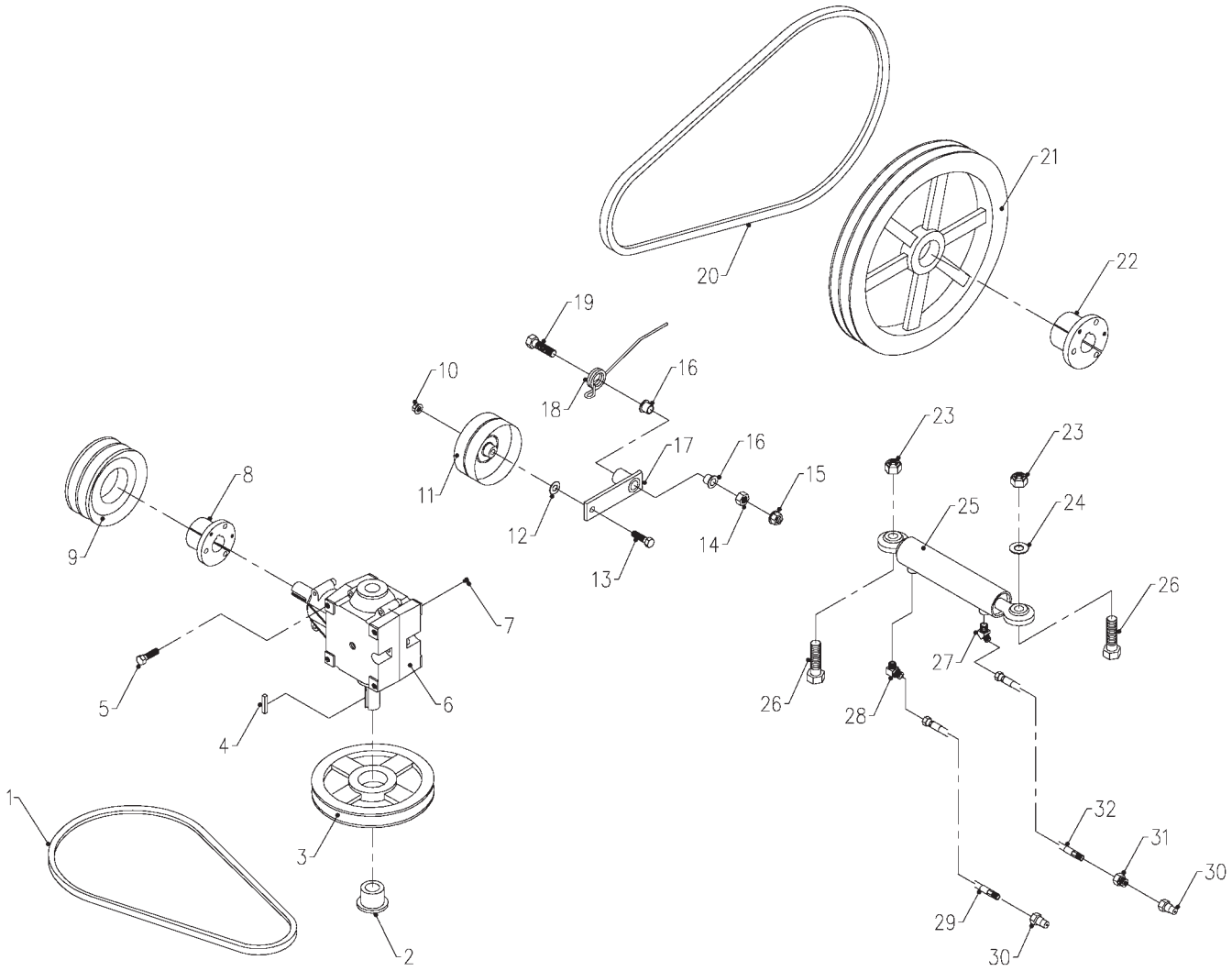

HYDRAULICS & PULLEYS

REF.	PART NO.	DESCRIPTION	QTY.
1	*81.A066	*A66 Belt	1
	**81.A068	**A68 Belt	1
2	83.H16S	1” Split Bushing	1
3	83.BK50H	5” BK Pulley	1
4	85.K0408	1/4” x 1 Key	2
5	*99.SF0606	*3/8-16 x 3/4 Flange Bolt	4
	**99.SF0506	**5/16-18 x 3/4 Flange Bolt	4
6	*87.0178	*Large Gearbox	1
	**87.0188	**Small Gearbox	1
7	29.0093	1/4 NPT Breather Plug	1
8	83.SH16	1” SH Bushing	1
9	83.2B36SH	3.6” 2B Pulley	1
10	99.SF06	3/8-16 Flange Nut	1
11	83.0042	4” Double Idler Pulley	1
12	95.06	3/8” SAE Washer	1
13	90.0614	3/8-16 x 1-3/4 Bolt	1
14	99.E0058	1/2-13 Jam Nut	1
15	99.SF08	1/2-13 Flange Nut	1
16	85.B0027	1/2” ID x 5/8 OD Bushing	2
17	40.0282	Belt Tensioner Arm	1
18	41.0066	Single Torsion Spring	1
19	90.0818	1/2-13 x 2-1/4 Bolt	1
20	81.B042	B42 Belt	2
21	83.2B94SK	9.4” 2B Pulley	1
22	83.SK24	1-1/2” SK Bushing	1
23	99.A10	5/8-11 Lock Nut	2
24	95.10	5/8” SAE Washer	1
25	23.0100	1-1/2” x 5 Cylinder	1
25	23.0130	1-1/2” x 5 Cylinder	1
26	90.1016	5/8-11 x 2 Bolt	2
27	25.2503-06-04	Hyd. Fitting - 45 deg. - 3/8 x 1/4	1
27	25.6802-06-06	Hyd. Fitting - 45 deg. - 3/8 x 3/8	1
28	25.2501-06-04	Hyd. Fitting - 90 deg. - 3/8 x 1/4	1
28	25.6801-06-06	Hyd. Fitting - 90 deg. - 3/8 x 3/8	1
29	20.0166	Hyd. Hose Assembly - 1/4 x 35	1
30	23.0104	Male Quick Coupler	2
31	29.0092	.025 Orifice Fitting	1
32	20.0168	Hyd. Hose Assembly - 1/4 x 32	1

*These parts are used only on units with the following serial numbers.
AA1006, AA1009, AA1010, AA1013, AA1017, & AA1018

**All other units use these parts.

Items 25, 27, and 28. Cylinder 23.0100, Fitting 25.2501-06-04, and Fitting 25.2503-06-04 are used through serial number AA-1062. They are replaced by Cylinder 23.0130, Fitting 25.6801-06-06, and Fitting 25.6802-06-06 beginning with serial number AA-1063 on LS420.

REVISED 02-28-03

LIMITED WARRANTY – VENTRAC TURF EQUIPMENT

Venture Products, Inc. (shall be referred to as *V.P.I.*) warrants on the terms and conditions herein, that it will repair, replace, or adjust any part manufactured by *Venture Products* Inc. and found by *Venture Products Inc* to be defective in material and / or workmanship.

Effective September 1st 2004, *Ventrac* warranty on Tractors & Attachments for **Residential use only** is limited to **Three (3) years** from original purchase date. Ventrac Tractors & Attachments used **Commercially or for any income producing purpose** is limited to **Two (2) years** from original purchase date. *Ventrac* ET200 turbine blower (turbine only) is limited to **Two (2) years** from original purchase date. *Ventrac* HG150 generator is limited to **One (1) year** from original purchase date. *Ventrac* Tractors & Attachments used for **Rental** is limited to **180 days** from original purchase date. (**NOTE:** All accessories such as: 3-point hitch, foot pedal, dual wheel kit, etc. will be covered under the above warranty periods as they would apply provided they are installed by an Authorized *Ventrac* Dealer.) This warranty may be transferred and will carry the remainder of the warranty starting from the Original Purchase/Registration date with the dealership and/or *V.P.I.* In the event that product/s originally registered as **(3) year Residential use** are to be transferred to a commercial user the warranty would change to the remainder of **(2) year Commercial use** starting from the Original Purchase/Registration date with the dealership and/or *V.P.I.*

If this warranty covers a consumer product as defined by the Magnusson-Moss warranty act, no warranties, express or implied, (including, but not limited to, the warranty of merchantability or fitness for a particular purpose) shall extend beyond the applicable time period stated in bold face type above.

If this warranty covers a product used commercially or for any income producing purpose, the foregoing warranties are in lieu of all other warranties and no representations, guarantees or warranties, express or implied, (including, but not limited to, a warranty of merchantability or fitness for a particular purpose), are made by *V.P.I.* in connection with the manufacture or sale of its products.

The engine warranty is covered by its respective engine manufacturer. Please refer to the engine manufacturer's warranty statement that is included in the owner's manual. *V.P.I.* does not handle warranty adjustments on engines. Engine warranties should be referred to the nearest authorized service outlet of the engine manufacturer.

The *Ventrac* turf equipment, including any defective parts, must be returned to an Authorized *Ventrac* Dealer within the warranty period. The warranty shall extend to the cost to repair or replace (as determined by *V.P.I.*) the defective part. **The expense of pickup and delivery of equipment, service call drive time or any transportation expense incurred for warranty repair is the sole responsibility of the owner and is not covered under warranty by *Ventrac and/or V.P.I.*** *V.P.I.'s* responsibility in respect to claims is limited to making the required repairs or replacements, and no claim of breach of warranty shall be cause for cancellation or rescission of the contract of sale of any *Ventrac* equipment. Proof of purchase may be required by the dealer to substantiate any warranty claim. Only warranty work performed and submitted by an Authorized *Ventrac* Dealer may be eligible for warranty credit.

This warranty extends only to *Ventrac* turf equipment operated under normal conditions and properly serviced and maintained. The warranty expressly does **NOT** cover: (a) any defects, damage or deterioration due to normal use, wear and tear, or exposure; (b) normal maintenance services, such as cleaning, lubrication, oil change; (c) replacement of service items, such as oil, lubricants, spark plugs, belts, rubber hoses or other items subject to normal service replacement; (d) damage or defects arising out of, or relating to abuse, misuse, neglect, alteration, negligence or accident; (e) repair or replacement arising from

operation of, or use of the turf equipment which is not in accordance with operating instructions as specified in the operator's manual or other operational instructions provided by *V.P.I.*; (f) repair or replacement arising as a result of any operation from Ventrac turf equipment that has been altered or modified so as to, in the determination of *V.P.I.*, adversely affect the operation, performance or durability of the equipment or that has altered, modified or affected the turf equipment so as to change the intended use of the product; (g) repair or replacement necessitated by the use of parts, accessories or supplies, including gasoline, oil or lubricants, incompatible with the turf equipment or other than as recommended in the operator's manual or other operational instructions provided by *V.P.I.;* (h) repairs or replacements resulting from parts or accessories which have adversely affected the operation, performance or durability of the turf equipment; or (i) damage or defects due to or arising out of repair of *Ventrac* turf equipment by person or persons other than an authorized *Ventrac* service dealer or the installation of parts other than genuine *Ventrac* parts or *Ventrac* recommended parts.

The sole liability of *V.P.I.* with respect to this warranty shall be repair and replacement as set forth herein. *V.P.I.* shall have no liability for any other cost, loss, or damage. In particular *V.P.I* shall have no liability or responsibility for: (i) expenses relating to gasoline, oil, lubricants; (ii) loss, cost or expense relating to transportation or delivery of turf equipment from the location of owner or location where used by owner to or from any Authorized *Ventrac* Dealer; (iii) travel time, overtime, after hours time or other extraordinary repair charges or charge relating to repairs or replacements outside of normal business hours at the place of business of an Authorized *Ventrac* Dealer; (iv) rental of like or similar replacement equipment during the period of any warranty repair or replacement work; (v) any telephone or telegram charges; (vi) loss or damage to person or property other than that covered by the terms of this warranty; (vii) any claims for lost revenue, lost profit or additional cost or expense incurred as a result of a claim of breach of warranty; or (viii) attorney's fees.

The remedies of buyer set forth herein are exclusive and are in lieu of all other remedies. The liability of *V.P.I.*, whether in contract, tort, under any warranty, or otherwise, shall not extend beyond its obligation as set forth herein. *V.P.I.* shall not be liable for cost of removal or installation nor shall *V.P.I.* be responsible for any direct, indirect, special or consequential damages of any nature. In no event shall *V.P.I.* be liable for any sum in excess of the price received for the goods for which liability is claimed.

There are no representations or warranties which have been authorized to the buyer of the turf equipment other than set forth in this warranty. Any and all statements or representations made by any seller of this equipment, including those set forth in any sales literature or made orally by any sales representative, are superceded by the terms of this warranty. Any affirmation of fact or promise made by *V.P.I.* or any of its representatives to the buyer which relates to the goods that are the subject to this warranty shall not be regarded as part of the basis of the bargain and shall not be deemed to create any express warranty that such goods shall conform to the affirmation or promise.

No employee, distributor, or representative is authorized to change the foregoing warranties in any way or grant any other warranty on behalf of *V.P.I.*

Some states do not allow limitations on how long an implied warranty lasts or allow the exclusion on limitation of incidental or consequential damages, so the above limitation or exclusion may not apply to you.

This warranty gives you specific legal rights, and you may also have other rights which vary from state to state.

This warranty applies to all *Ventrac* turf equipment sold in the United States and Canada.

Ventrac Engine & Component Warranties

VENDOR	VENTRAC PRODUCT	VENDOR WARRANTY	WARRANTY PROCEDURE
Kawasaki (Engines)	**3000 Series 4200, 4100 Series**	Two (2) years	Claim processed by a Kawasaki authorized servicing dealer to Kawasaki
Vanguard (Engines)	**4200, 4100 Series**	Two (2) years 3rd year on major parts only (See engine owner's manual)	Claim processed by a Vanguard authorized servicing dealer to local distributor
Peerless Gear & Machine Division of Tecumseh (Transaxles)	**4200, 4100 Series**	Two (2) years for consumer application One (1) year for commercial application	Claim processed by an authorized Tecumseh servicing dealer to Tecumseh
Sauer-Danfoss (Hydraulic pumps & motors)	**4200, 4100 Series**	Three (3) years for consumer *3rd year prorated Two (2) year for commercial *2nd year prorated	Venture Products processes warranty claim
Sauer-Danfoss (Steering & Control Valves)	**3000 Series 4200, 4100 Series**	Three (3) years for consumer *3rd year prorated Two (2) year for commercial *2nd year prorated	Venture Products processes warranty claim
Hydro-Gear (Transaxles)	**3000 Series**	Two (2) years for consumer application One (1) year for commercial application	Venture Products processes warranty claim
Titan Tire	**3000 Series 4200, 4100 Series**	Three (3) years; prorated after first year for original owner only	Claims processed by Titan Tire authorized dealer
Carlisle Tire	**4200, 4100 Series**	Two (2) years for original owner	Claim processed by Carlisle Tire authorized dealer

*3rd year prorated for consumer application – 50% of parts & labor
*2nd year prorated for commercial application – 50% of parts & labor

Contacts for locating local authorized dealer for the following:

Briggs & Stratton Corp.
PO Box 702
Milwaukee, WI 53201
800-444-7774

Kawasaki Motors Corp.
Grand Rapids, MI 49512
(800) 433-5640

Tecumseh/Peerless Products Corp
Engine and Gear Service Division
Grafton, WI 53024
800-558-5402

Carlisle Tire Corp.
23 Windham Boulevard
Aiken, SC 29805
800-260-7959 Warranty

Titan Tire Corp
2345 E. Market St.
Des Moines, IA 50317
800-872-2327 Warranty